V11684

EV-C45E
RMT-V124

SERVICE MANUAL

AEP Model
UK Model
E Model

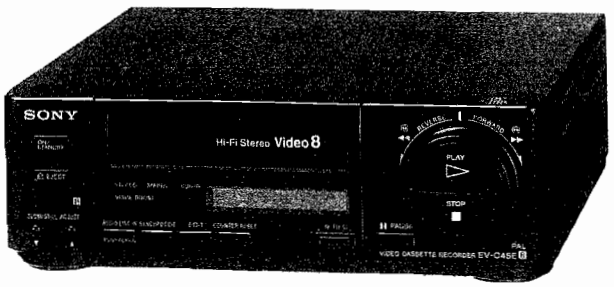

Phot : AEP model

Remote commander is available as a unit, See page 99 for repair parts.

Video 8

U' MECHANISM

Note : AEP, UK models : Video casstte recorder
E model : Video casstte player

For MECHANICAL ADJUSTMENT, refer to the "8mm Video MECHANICAL ADJUSTMENT MANUAL III (U MECHANISM)" (9-972-732-11).

SPECIFICATIONS

System

Video recording system
Rotary two-head helical scanning FM system
Audio recording
Rotary head, AFM system
Video signal PAL colour, CCIR standards
Usable cassette 8 mm video format cassettes
Tape speed SP: approx. 20.051mm/sec.
LP: approx. 10.058mm/sec.
Maximum recording time
SP: 1 hours 30 minutes
LP: 3 hours (with Sony P5-90)
Fast-forward and rewind time
Approx. 4.5 minutes (with Sony P5-90 cassette)

Inputs and outputs

Video input LINE IN VIDEO (phono jack) (1)
Input signal: 1 Vp-p, 75 ohms, unbalanced,sync negative
Video output LINE OUT VIDEO (phono jack) (1)
Output signal: 1 Vp-p, 75 ohms, unbalanced,sync negative
EURO-AV (21-pin) (1)
Output signal: pin 19 1 Vp-p, 75 ohms unbalanced, sync negative
Audio input LINE IN AUDIO (phono jack) (2)
Input level: -7.5 dBs
Input impedance: more than 47 kilohms

Audio output LINE OUT AUDIO (phono jack) (2)
Standard impedance:
-7.5 dBs at load impedance
47 kilohms
Output impedance:
less than 10 kilohms
EURO-AV (21 pin) (1)
Standard impedance:
-6 dBs at load impedance 1Kilohm
Output impedance:less than 10 Kilohms
CONTROL S IN Minijack
CONTROL L stereo mini-mini jack
RF output signal
UK models: UHF channels B30-B39 (variable)
Models for other countries:
UHF channels E30-E39 (variable)
Aerial input/output
75 ohms asymmetrical
aerial sockets

— continued on next page —

MICROFILM

8 VIDEO CASSETTE RECORDER
8 VIDEO CASSETTE PLAYER

SONY®

General

Power requirements	
UK models:	240V AC, 50 Hz
AEP model:	220-230V AC, 50Hz
E model:	220-240V AC, 50Hz
Power consumption	12 W (max.)
Operating temperature	5° C to 40° C (41° F to 104° F)
Storage temperature	-20° C to 60° C (-4° F to +140° F)
Dimensions	Approx. 225 x 75 x 252 mm (w/h/d) Approx. 8 7/8 x 3 x 10 inch
Mass	Approx. 2.2 Kg (4 lb 14 oz)

Remote Commander RMT-V124

Remote control system	Infrared control
Power requirements	3V DC 2 IEC designation R6 batteries

Design and specifications subject to change without notice.

Note
This appliance conforms with EEC directive 87/308/EEC regarding interference suppression.

Unpacking

Unpack all the items and check to confirm that you have everything listed below.

- Remote Commander RMT-V124 (1)
- Size AA (R6) batteries (2)
- Coaxial cable (1)
- Mains lead (1)
- Plastic adjuster (1)

SAFETY CHECK-OUT

After correcting the original service problem, perform the following safety checks before releasing the set to the customer:

1. Check the area of your repair for unsoldered or poorly-soldered connections. Check the entire board surface for solder splashes and bridges.
2. Check the interboard wiring to ensure that no wires are "pinched" or contact high-wattage resistors.
3. Look for unauthorized replacement parts, particularly transistors, that were installed during a previous repair. Point them out to the customer and recommend their replacement.
4. Look for parts which, though functioning, show obvious signs of deterioration. Point them out to the customer and recommend their replacement.
5. Check the line cord for cracks and abrasion. Recommend the replacement of any such line cord to the customer.

SAFETY-RELATED COMPONENT WARNING!!

COMPONENTS IDENTIFIED BY MARK ⚠ OR DOTTED LINE WITH MARK ⚠ ON THE SCHEMATIC DIAGRAMS AND IN THE PARTS LIST ARE CRITICAL TO SAFE OPERATION. REPLACE THESE COMPONENTS WITH SONY PARTS WHOSE PART NUMBERS APPEAR AS SHOWN IN THIS MANUAL OR IN SUPPLEMENTS PUBLISHED BY SONY.

TABLE OF CONTENTS

SECTION 1
SERVICE NOTE

1-1. REMOVAL OF CASSETTE AT FAILURE WITH CASSETTE INSERTED

Ⓐ If tape is wounded on the drum and it cannot be removed: Rotate the capstan motor wheel in either direction and rotate the S or R reel to house the tape. Then, perform Procedure Ⓑ.

Ⓑ If tape is housed in the cassette half and cannot be removed:

① Remove the MD block. (For removal, refer to Section 3-3.)

② Release the drive arm lock from the drive arm (L) located between the L frame and the left side of the cassette controller in the arrow direction Ⓐ.

③ Rotate the connecting gear in the arrow direction Ⓑ with both the thumbs.

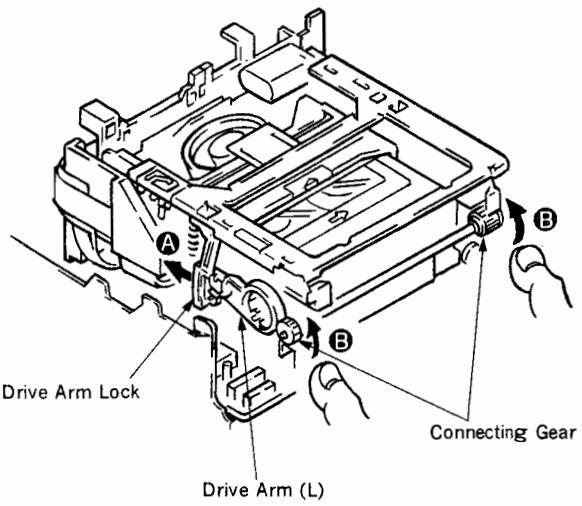

1-2. REPLACEMENT OF EXTERNAL PARTS

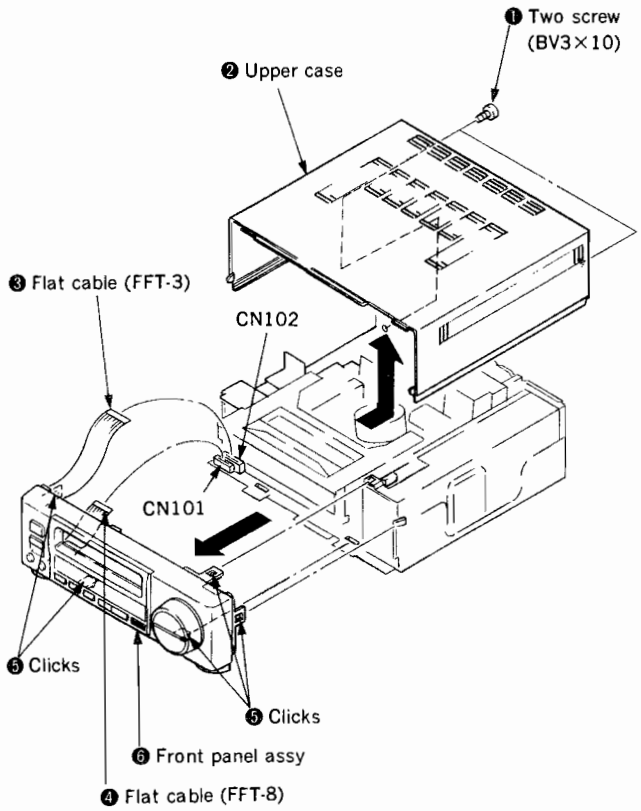

1-3. REPLACEMENT OF CASSETTE DOOR ASSEMBLY

1) Remove the front panel.
2) First undo Ⓐ portion toward you and then undo Ⓑ.

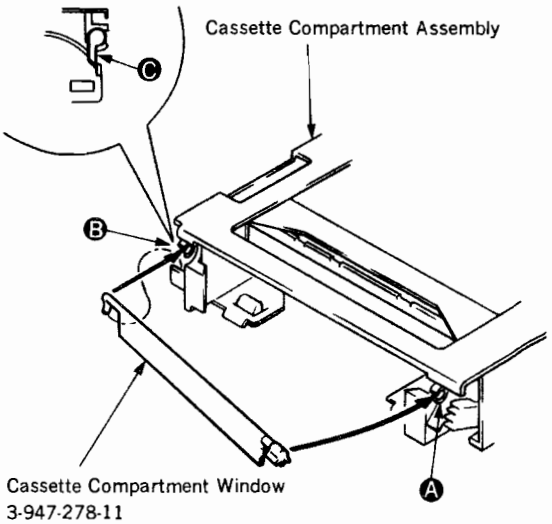

3) When installing, as shown above, first put in Ⓑ portion by setting the claw Ⓒ. Then, put in Ⓐ portion and install so that the door hangs almost vertically.

1-4. CLEANING OF VIDEO HEAD AND RUN SYSTEM

Method 1

〔Cleaning Method with Cleaning Tape〕

- A cleaning cassette should be used. (When using, the attached manual for the cleaning cassette should be thoroughly read.)

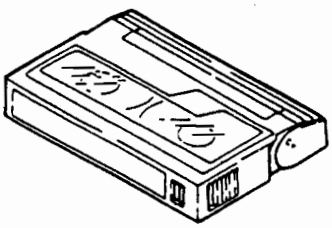

Method 2

〔Cleaning Method with Cleaning Liquid〕

①Remove the upper case of the video deck.

②Apply cleaning liquid to a head cleaner stick.

③As shown in the right figure, press the head cleaner stick lightly. Turn the rubber of the rotary upper drum gradually and clean the video deck.

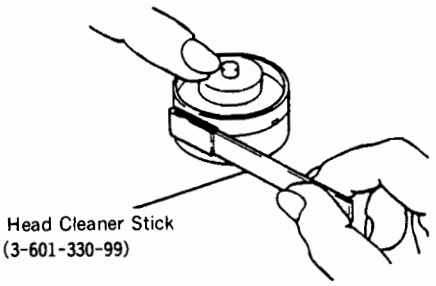

〔Cleaning Method for Run System〕

①Apply cleaning liquid to a head cleaner stick.

②Clean the guides which tape touches directly and the pinch roller with the head cleaner.

1-5. REPLACEMENT OF UPPER ROTARY DRUM

Method 3

Caution

- Particular care must be taken when handling the video head and the terminals
- When handling the rotary upper drum, do not touch the side (A portion) and hold the top (B portion) (See Fig. 1)

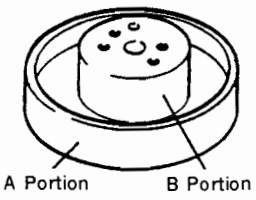

(Fig. 1)

Removal of Rotary Upper Drum

①Remove two screws (2×4) (See Fig. 2).

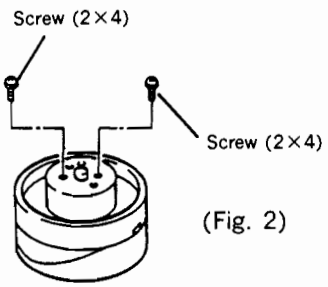

(Fig. 2)

②Fix the jig (supplied with the spare rotary upper drum) with the two attached short screws. Then, put the attached long screw into the jig until the rotary upper drum may be removed (See Fig. 3).

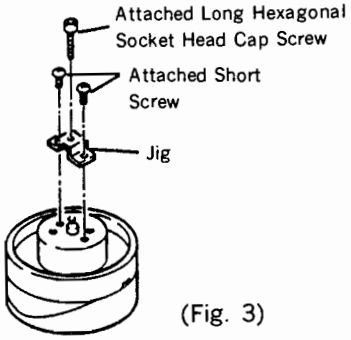

(Fig. 3)

Installation of New Rotary Upper drum

①Clean the flange face and the bottom face of the new rotary upper drum (See Fig. 4).

②Insert the shaft attached to the jig into the positioning hole in the lower drum. Then, put the shaft through the positioning hole in the new rotary upper drum and set the drum lightly.

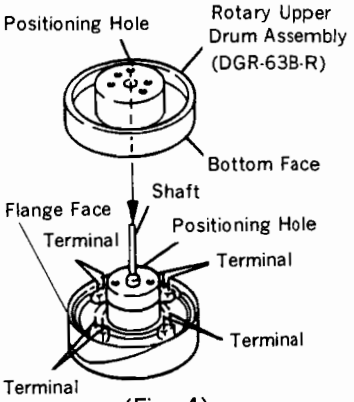

(Fig. 4)

③With the shaft inserted into the positioning hole, push into the upper drum lightly with a hand. If the drum is not allowed to be bottomed, alternately tighten two screws (2×4) gradually and install the drum (See Fig. 5)

④Pull out the shaft inserted. If the shaft is not allowed to be withdrawn smoothly, go back to Step ② and redo the procedure.

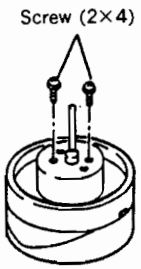

(Fig. 5)

⑤Once the drum has been replaced, clean the video head and the run system with a head cleaner stick (See "Cleaning Method 2 for Video Head and Run System).

SECTION 2
GENERAL

This section is extracted from instruction manual.

Identifying the Parts and Controls

Front Panel

The function of each control is explained on the page indicated in parentheses ( ).

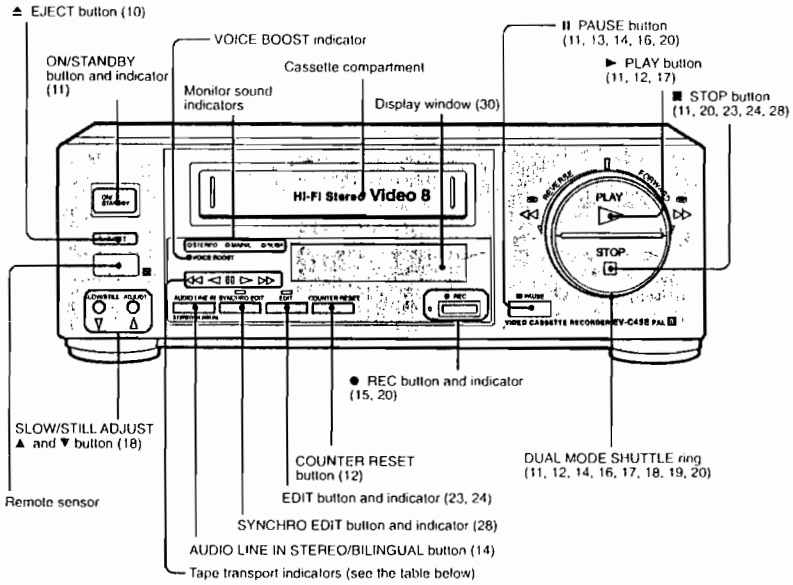

No indicator lit	Recording *	II	Recording pause **
◄	Playback, double speed playback (reverse), Slow motion playback (reverse)	►	Playback, double speed playback (forward), Slow motion playback (forward)
◄ II	Play pause (reverse)	II ►	Play pause (forward)
◄◄	Rewind	►►	Fast forward
◄◄ ►	Picture search, locked picture search (reverse)	► ►►	Picture search, locked picture search (forward)
◄	Frame-by-frame picture (reverse)	►	Frame-by-frame picture (forward)
◄◄	Auto play		

* Only the REC indicator left side of the REC button lights up.
** The REC indicator left side of the REC button lights up together with the II indicator of the tape transport indicators.

Display Window

Each indicator is explained on the page indicated in parentheses ( ).

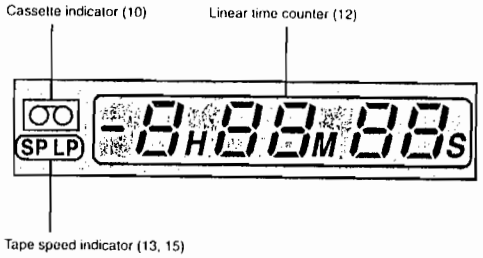

Rear Panel

The function of each control is explained on the page indicated in parentheses ( ).

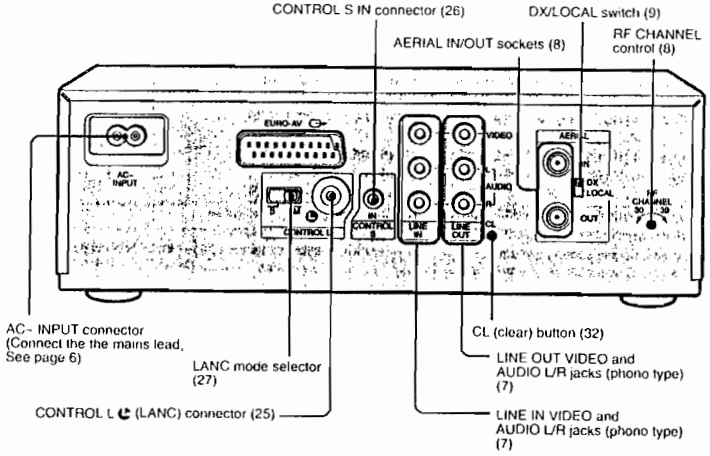

EV-C45E

Remote Commander

The function of each control is explained on the page indicated in parentheses ( ).

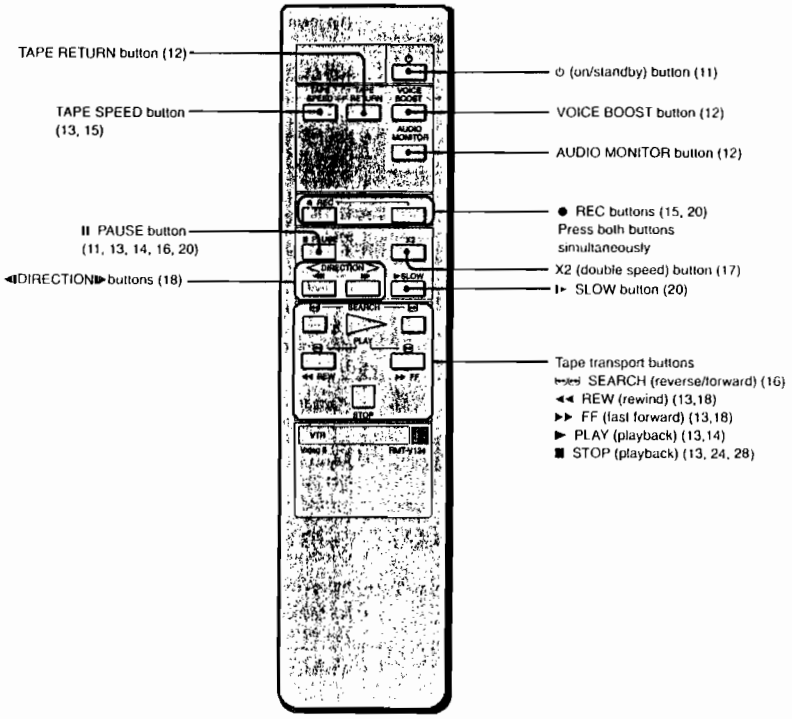

Variable Speed Playback

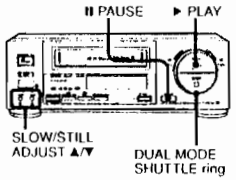

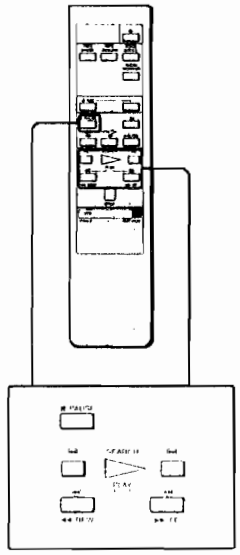

The following section explains the advanced playback functions available on your VCR.

Using the DUAL MODE SHUTTLE ring on the VCR or ►► FF and ◄◄ REW on the Remote Commander, you can play a cassette at a variety of forward and reverse speeds. You can also freeze a picture using the pause function.

Still Picture

During playback, press II PAUSE to hold the picture in one place.

To resume normal playback
Press either ► PLAY or II PAUSE.

If you leave your VCR in pause mode, normal playback resumes after approximately 7 minutes.

The sound is not heard during still picture playback.

If a still picture shakes up and down or has streaks, you can adjust it using SLOW/STILL ADJUST ▼/▲ on the front of the VCR. (See " Tracking Adjustment " on page 18.)

Picture Search During Playback

VCR: Turn the DUAL MODE SHUTTLE ring clockwise or counterclockwise.
When you release the ring, normal playback will resume.

Remote Commander: Press ►► FF or ◄◄ REW.
When you release the button, normal playback will resume.

Locked Picture Search

This feature works only when using the Remote Commander.

Press SEARCH on the Remote Commander during playback or playback pause. If you press SEARCH, the VCR enters locked picture search mode in the reverse direction. If you press SEARCH, the VCR enters locked picture search mode in the forward direction.

To resume normal playback
Press ► PLAY.

Notes on playback in SP mode

- When viewing the picture in variable speed playback mode, the picture may shake vertically or the colour may become black and white, depending upon the TV you are using.
- During picture search , several streaks will appear on the TV screen. This is normal.
  If you play back a tape recorded in SP mode, a wider streak will appear on the TV screen during picture search.
- If you perform picture search with the VCR connected to your TV via AERIAL OUT, you may hear a slight sound such as a buzzing sound.
- When you perform a variable speed playback in the reverse direction, a wider streak appears on the screen, especially in SP mode. This is normal.

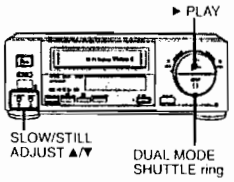

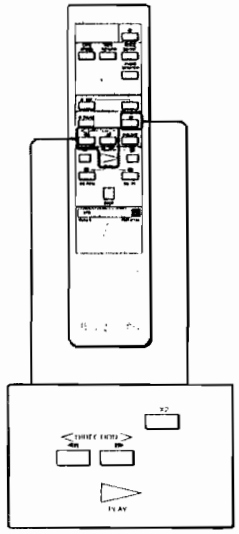

x 2 (Double), –x 2 (Reverse Double) Speed Playback

VCR:
Slowly turn the DUAL MODE SHUTTLE ring clockwise (in the forward direction) or counterclockwise (in the reverse direction) until the tape is played back in the forward or reverse direction at a speed double the normal playback.

To return to normal playback
Release the ring.

Remote Commander:
Press x2.

To play back in the reverse direction
Press < DIRECTION.

To resume the forward direction
Press DIRECTION >.

To return to normal playback
Press ▶ PLAY.

The sound is heard but distorted during forward double-speed playback and the sound is muted during reverse double-speed playback.

If a picture shakes up and down or has streaks during forward double-speed playback, you can adjust it using SLOW/STILL ADJUST ▼ or ▲ on the front of the VCR. (See "Tracking Adjustment" on page 18.)

–x 1 (Reverse) Speed Playback

VCR:
Gently turn the DUAL MODE SHUTTLE ring counterclockwise until the VCR enters reverse slow motion playback mode. After a slow motion picture appears on the TV screen, you can view a –x 1 (reverse) playback picture. Hold the DUAL MODE SHUTTLE ring at that point.

Remote Commander:
Press ▶ PLAY, then < DIRECTION.

Frame - by - Frame Picture

During playback pause, press DIRECTION > to advance the picture one frame or < DIRECTION to reverse the picture one frame.
Each time you press the button, the picture moves one frame.

To resume normal playback
Press ▶ PLAY.

Notes
- It takes about two or three seconds to reverse the direction in slow motion mode or frame-by-frame mode.
- When the tape speed is switched, noise appears a moment.
- If a tape has portions recorded in both SP and LP modes, the VCR will automatically adjust the tape speed during reverse/forward slow motion playback. However, you will not notice any change during x2 playback even though the tape speed is actually switched from SP to LP or LP to SP.

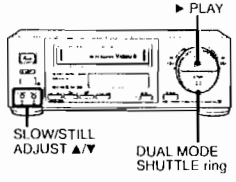

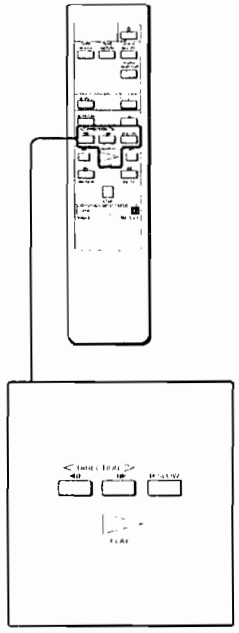

Slow Motion Playback

VCR:
Slowly turn the DUAL MODE SHUTTLE ring clockwise (in the forward direction) or counterclockwise (in the reverse direction) until the tape is played back in slow motion in the forward or reverse direction.

To return to normal playback
Release the ring.

Remote Commander:
Press ▮► SLOW.

To play back in the reverse direction
Press < DIRECTION.

To resume forward direction
Press DIRECTION >.

To return to normal playback
Press ▶ PLAY.

The sound is muted during reverse slow motion playaback.
If you leave the VCR in slow motion mode for more than one minute, the VCR will automatically return to normal playback.

If a slow motion picture shakes up and down or has streaks, you can adjust it by pressing SLOW/STILL ADJUST ▼ or ▲ on the VCR. (See "Tracking Adjustment" below.)

Tracking Adjustment

If a picture shakes up and down or has streaks during forward double-speed playbck, still playback, slow motion playback (in the forward and reverse direction), you can adjust it using SLOW /STILL ADJUST ▼ or ▲ on the front of the VCR.
However, the adjustment can't be performed while you are turning the DUAL MODE SHUTTLE ring. Use the Remote Commander, therefore, for operating still picture, slow motion, and x2 playback.

Press and hold SLOW/STILL ADJUST ▼ or ▲ on the VCR until you obtain the best possible picture on the TV screen.

Note
It is necessary to adjust tracking for both the SP and LP modes

Synchronized Editing

If your other VCR has a control L ⇳ or control S OUT connector, you can take advantage of a feature called "Synchronized Editing" that controls both VCRs (recording VCR and playback VCR), and releases the pause when SYNCHRO EDIT button is pressed. To use this function, you must connect a designated control cable (Control.L or S cable) in addition to the connections of the audio and video cables. There are two types of control cables: control L (REMOTE) cable and control S cable according to the type of connectors of the VCRs.
After you have made the connections on this and following pages, you must set the LANC mode. For details, see page 27.

Connecting Video Equipment with the LANC Connector

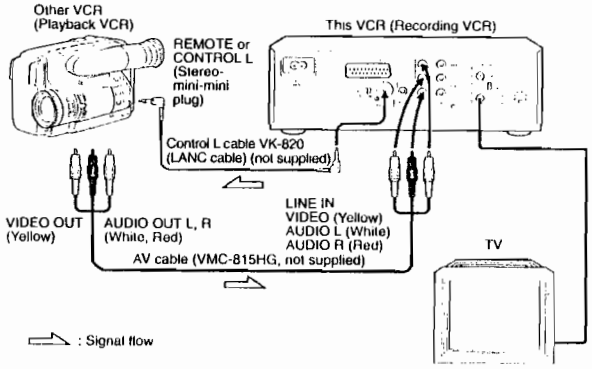

Notes

- When connecting the VCRs, do not connect them so that both VCRs are used as a recording VCR and a playbackVCR simultaneously. Doing so may cause a humming noise.
- If your playback VCR is a monaural unit, connect the white plug to the AUDIO OUT jack of the playback VCR and leave the red plug unconnected. At the same time, do not connect the red plug of the other end to the LINE IN AUDIO R jack of this VCR (recording VCR)
- If your playback VCR is a EURO 21-pin type, use the VMC-216 cable (not supplied).
- If another VCR has both the LANC connector and the CONTROL S connector, use the LANC connector. Do not make the LANC and CONTROL S connections simultaneously.

About the ⇳ (LANC)
LANC stands for Local Application Control System.
The LANC connector is used for controlling the tape transport of video equipment and peripherals connected to it. This connector has the same function as the connectors indicated as CONTROL L or REMOTE.

Connecting Video Equipment with the CONTROL S Connector

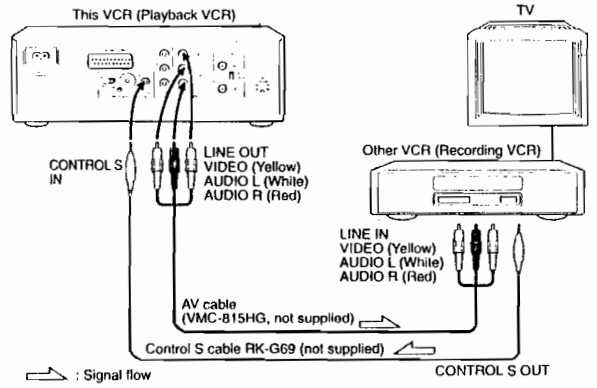

When using the CONTROL S cable
The synchronized editing using the CONTROL S connector is the same as the synchronized editing using the LANC connector. This enables you to pause both VCRs and release pause mode of both VCRs.
You can only perform synchronized editing using the CONTROL S IN connector when the other VCR has the CONTROL S OUT connector.
If the other video equipment has the synchronized function, use the SYNCHRO EDIT button on the other equipment.
Set the command mode of this VCR and the other video equipment to the same position.

LANC Mode Setting

When you perform synchronized editing, remember to set the LANC mode as described bellow:

When you want to control the other VCR from this VCR

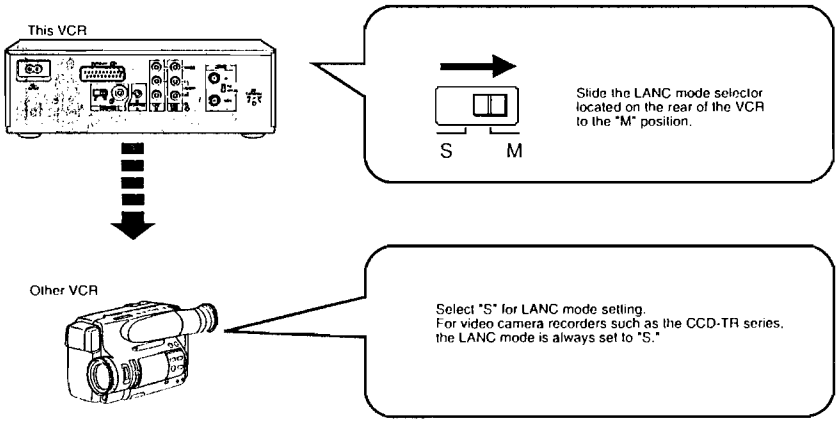

When you want to control this VCR from the other VCR

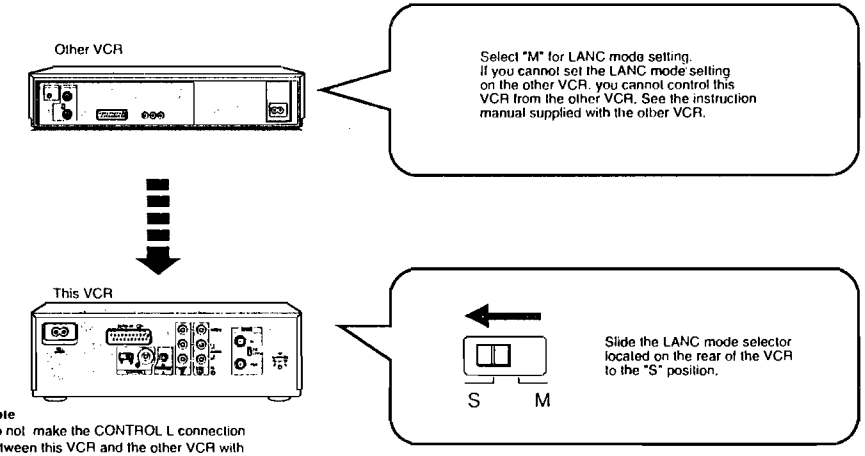

Note
Do not make the CONTROL L connection between this VCR and the other VCR with the LANC mode settings of both VCRs set to the same position.

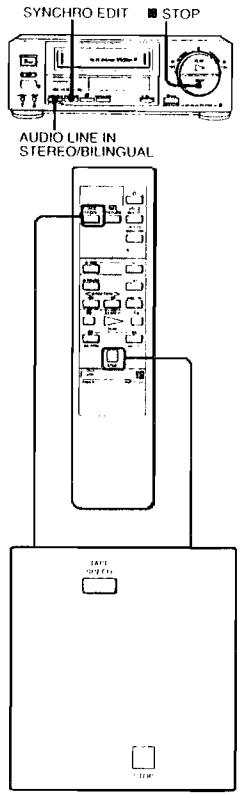

During synchronized editing
- The EDIT function is activated automatically.
- If the linear conter becomes zero, synchronized editing stops.
- The COUNTER RESET button can not function.

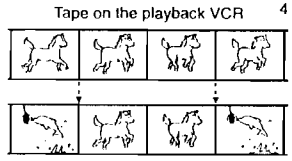

Synchronized Assemble Editing

Before You Begin

- Press TAPE SPEED on the Remote Commander to select the tape speed (SP or LP).
- Press AUDIO LINE IN STEREO/BILINGUAL to select the sound to be recorded if you record a stereo or bilingual tape.
- Check the LANC mode selector setting position (see page 27).

Operation

1 Insert a recorded cassette into the other (playback) VCR and a cassette for recording into this (recording) VCR.

2 Locate the recording starting point on this VCR and put the VCR in recording pause mode.

3 Locate the beginning of the scene to be edited out on the other VCR and put the VCR in playback pause mode.

4 Press SYNCHRO EDIT on this VCR. The SYNCHRO EDIT indicator lights up.
Pause mode of both the recording VCR and the playback VCR is released to start editing.

5 Press SYNCHRO EDIT on this VCR at the point where you want to stop recording.
This VCR enters recording pause mode, and the other VCR enters playback pause mode.

6 If you have another scene you want to edit, repeat steps 3 to 5.

7 After editing has been completed, press ■ STOP on both VCRs.

To make use of the linear counter "0H00S00M" (zero) for synchronized editing
You can perform synchronized insert editing when this VCR is used as the recording VCR and the LANC mode is set to "M".
When the linear counter on this (recording) VCR becomes zero during synchronized editing, the other (playback) VCR enters playback pause mode and this VCR enters recording pause mode.

See the instructions below for operation.
1 Insert a recorded cassette into the other (plyaback) VCR and a cassette for recording into this (recording) VCR.
2 Locate the editing end point (@) by playing back the cassette on this (recording) VCR and press COUNTER RESET on this VCR.
The counter reads "0H00M00S".
3 Rewind the tape on this VCR and put the VCR in recording pause mode at the ending start point (ⓑ).
4 To start editing, press SYNCHRO EDIT on this VCR.

When the linear counter becomes zero, the other VCR enters playback pause mode and this VCR enters recording pause mode.

SECTION 3
DISASSEMBLY

3-1. REMOVAL OF FRONT PANEL AND UPPER CASE

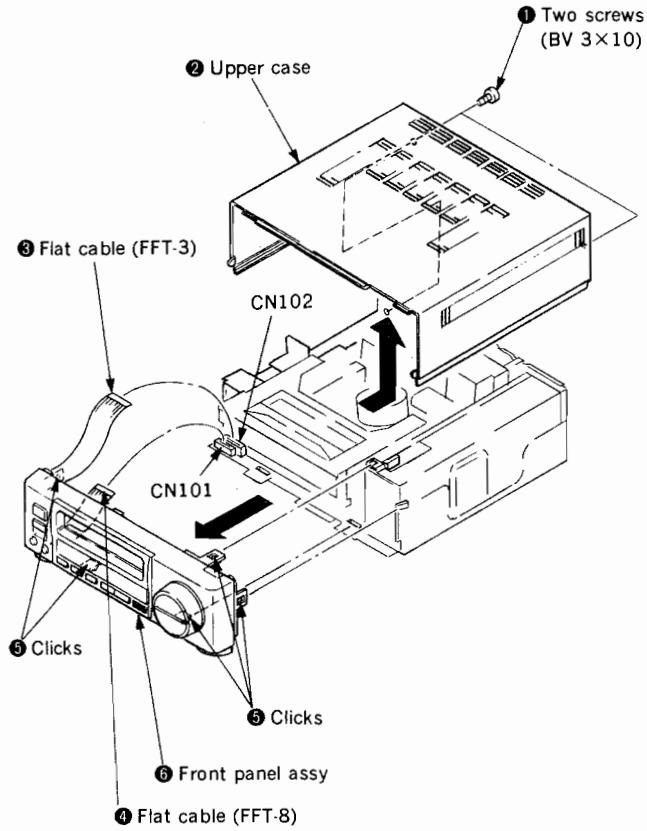

3-2. REMOVAL OF POWER BLOCK

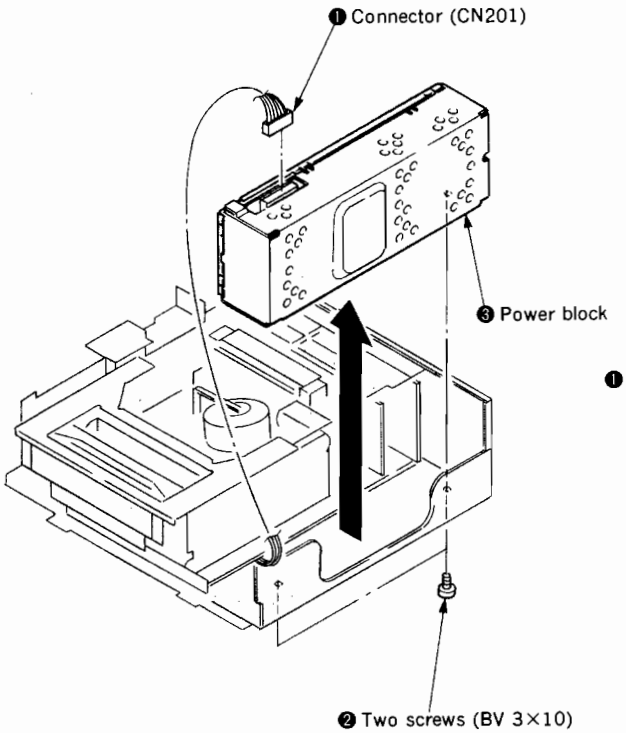

3-3. REMOVAL OF MECHANICAL BLOCK

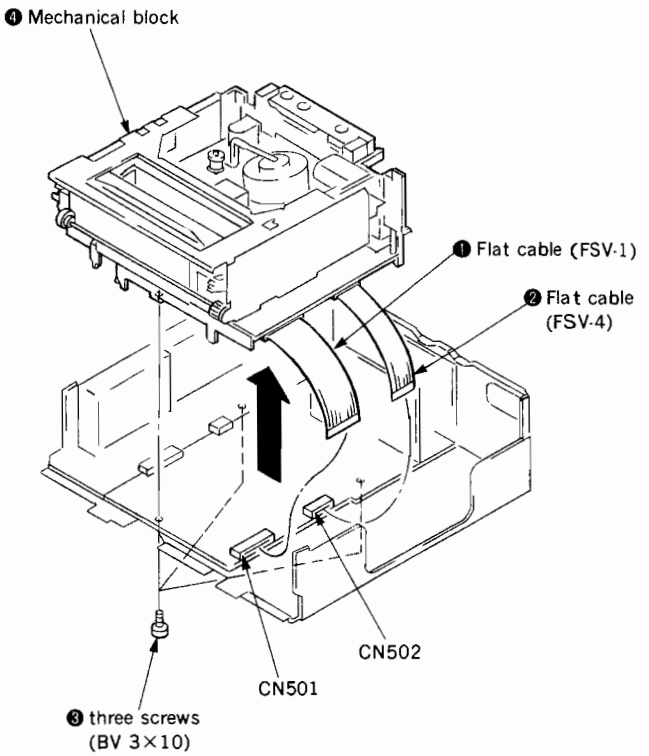

3-4. REMOVAL OF CASSETTE COMPARTMENT

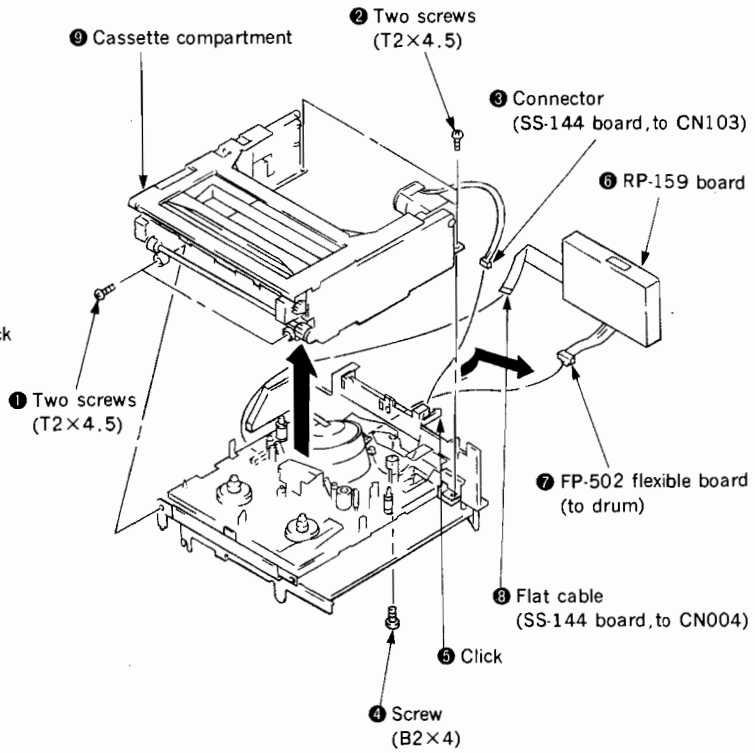

3-5. MECHANICAL INTERNAL VIEWS

—UPPER—

M901

Drum ASSY (DGU-63B-R)	A-7048-591-A
Drum upper (DGR-63B-R)	A-7049-552-A

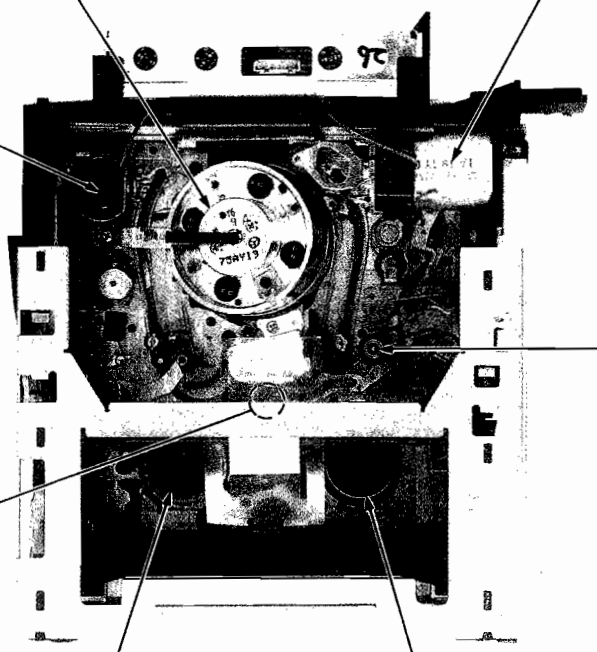

—LOWER—

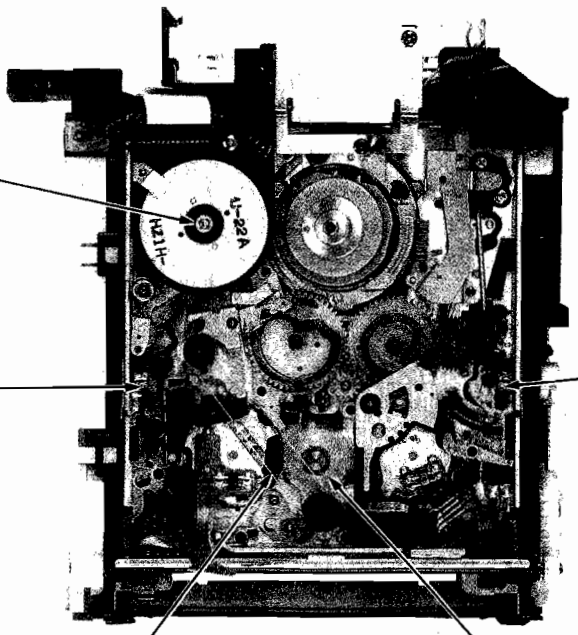

SECTION 4
DIAGRAMS

4-1. CIRCUIT BOARDS LOCATION

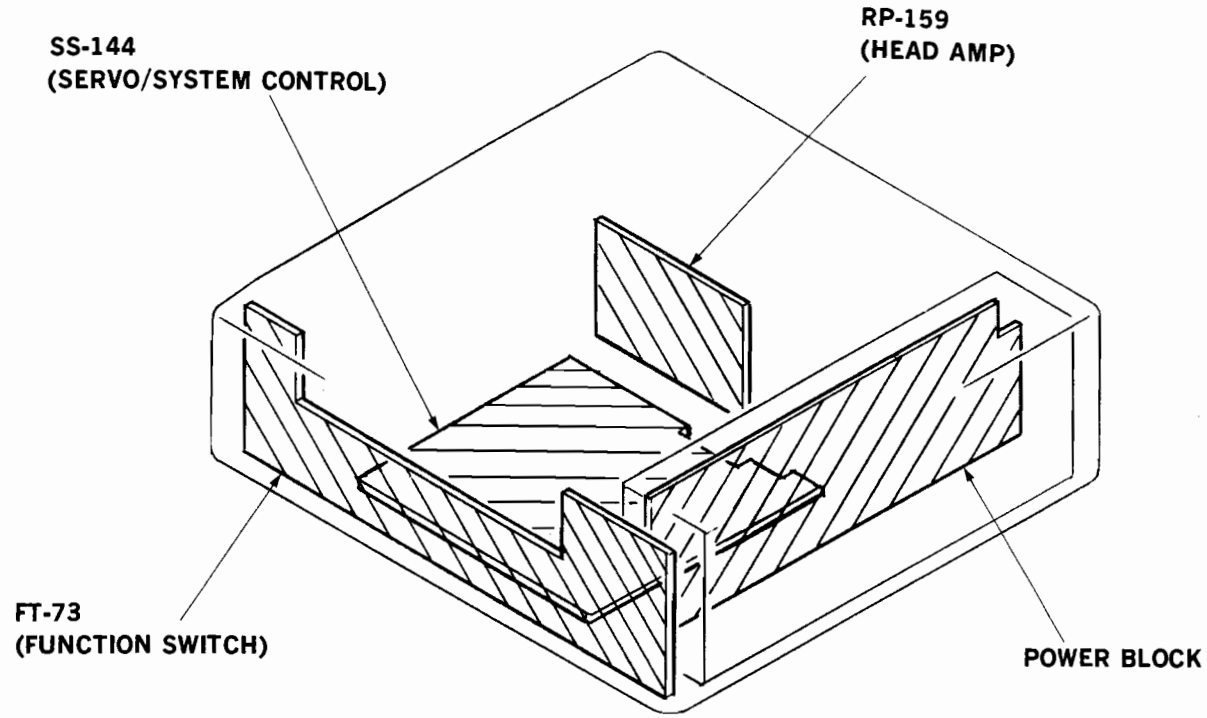

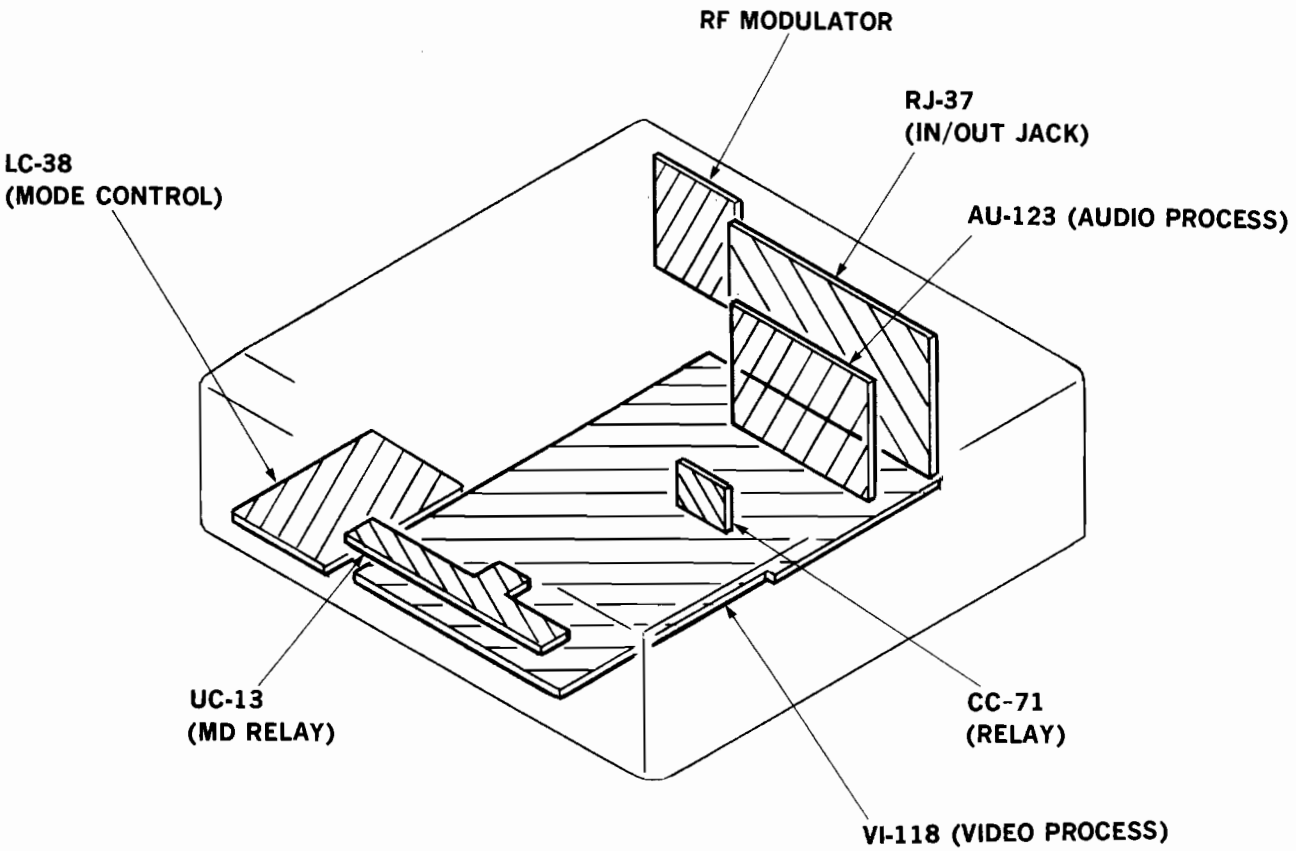

4-2. OVERALL BLOCK DIAGRAM

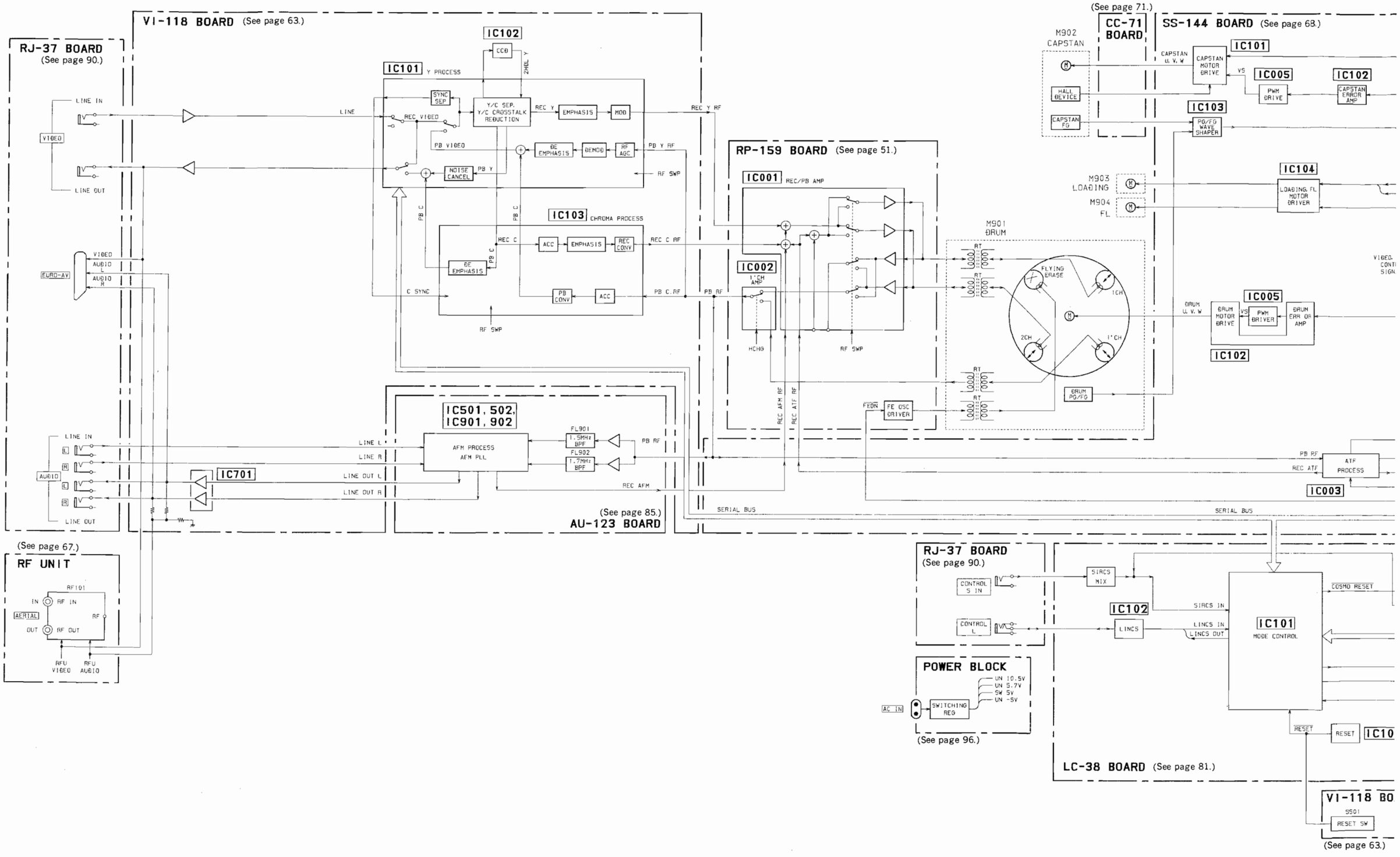

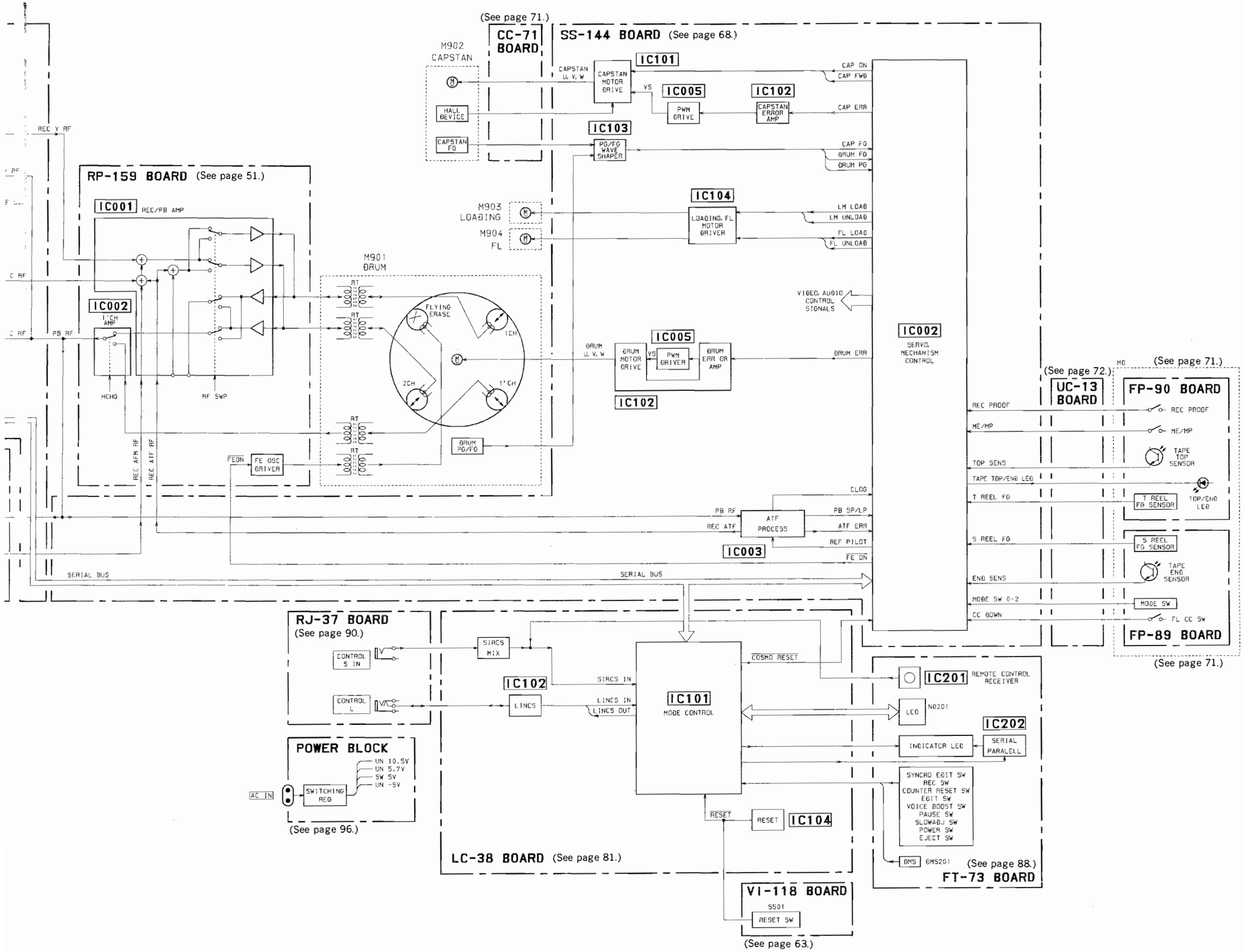
(See page 71.)
CC-71 BOARD
SS-144 BOARD (See page 68.)
M902 CAPSTAN
IC101
CAPSTAN U, V, W
CAPSTAN MOTOR DRIVE
VS
IC005
PWM DRIVE
IC102
CAPSTAN ERROR AMP
CAP ON
CAP FWD
CAP ERR
HALL DEVICE
CAPSTAN FG
IC103
PG/FG WAVE SHAPER
CAP FG
DRUM FG
DRUM PG
RP-159 BOARD (See page 51.)
IC001 REC/PB AMP
M903 LOADING
M904 FL
IC104
LOADING, FL MOTOR DRIVER
LM LOAD
LM UNLOAD
FL LOAD
FL UNLOAD
M901 DRUM
IC002 1CH AMP
FLYING ERASE
1CH
2CH
1'CH
VIDEO, AUDIO CONTROL SIGNALS
IC002 SERVO, MECHANISM CONTROL
IC005
DRUM U, V, W
DRUM MOTOR DRIVE
PWM DRIVER
DRUM ERR OR AMP
DRUM ERR
IC102
REC Y RF
C RF
PB RF
HCHG
RF SWP
REC AFM RF
REC ATF RF
FEON
FE OSC DRIVER
DRUM PG/FG
CLOG
PB RF
REC ATF
ATF PROCESS
PB SP/LP
ATF ERR
REF PILOT
IC003
FE ON
SERIAL BUS
SERIAL BUS
(See page 72.)
UC-13 BOARD
MB
(See page 71.)
FP-90 BOARD
REC PROOF
REC PROOF
ME/MP
ME/MP
TAPE TOP SENSOR
TOP SENS
TAPE TOP/END LED
TOP/END LED
T REEL FG
T REEL FG SENSOR
S REEL FG
S REEL FG SENSOR
TAPE END SENSOR
END SENS
MODE SW 0-2
MODE SW
CC DOWN
FL CC SW
FP-89 BOARD
(See page 71.)
RJ-37 BOARD
(See page 90.)
CONTROL S IN
CONTROL L
SIRCS MIX
IC102
SIRCS IN
LINCS
LINCS IN
LINCS OUT
IC101
MODE CONTROL
COSMO RESET
IC201 REMOTE CONTROL RECEIVER
LCD
ND201
IC202
INDICATOR LED
SERIAL PARALELL
SYNCRO EDIT SW
REC SW
COUNTER RESET SW
EDIT SW
VOICE BOOST SW
PAUSE SW
SLOWADJ SW
POWER SW
EJECT SW
DMS
DMS201
(See page 88.)
FT-73 BOARD
POWER BLOCK
AC IN
SWITCHING REG
UN 10.5V
UN 5.7V
SW 5V
UN -5V
(See page 96.)
RESET
RESET
IC104
LC-38 BOARD (See page 81.)
VI-118 BOARD
S501
RESET SW
(See page 63.)

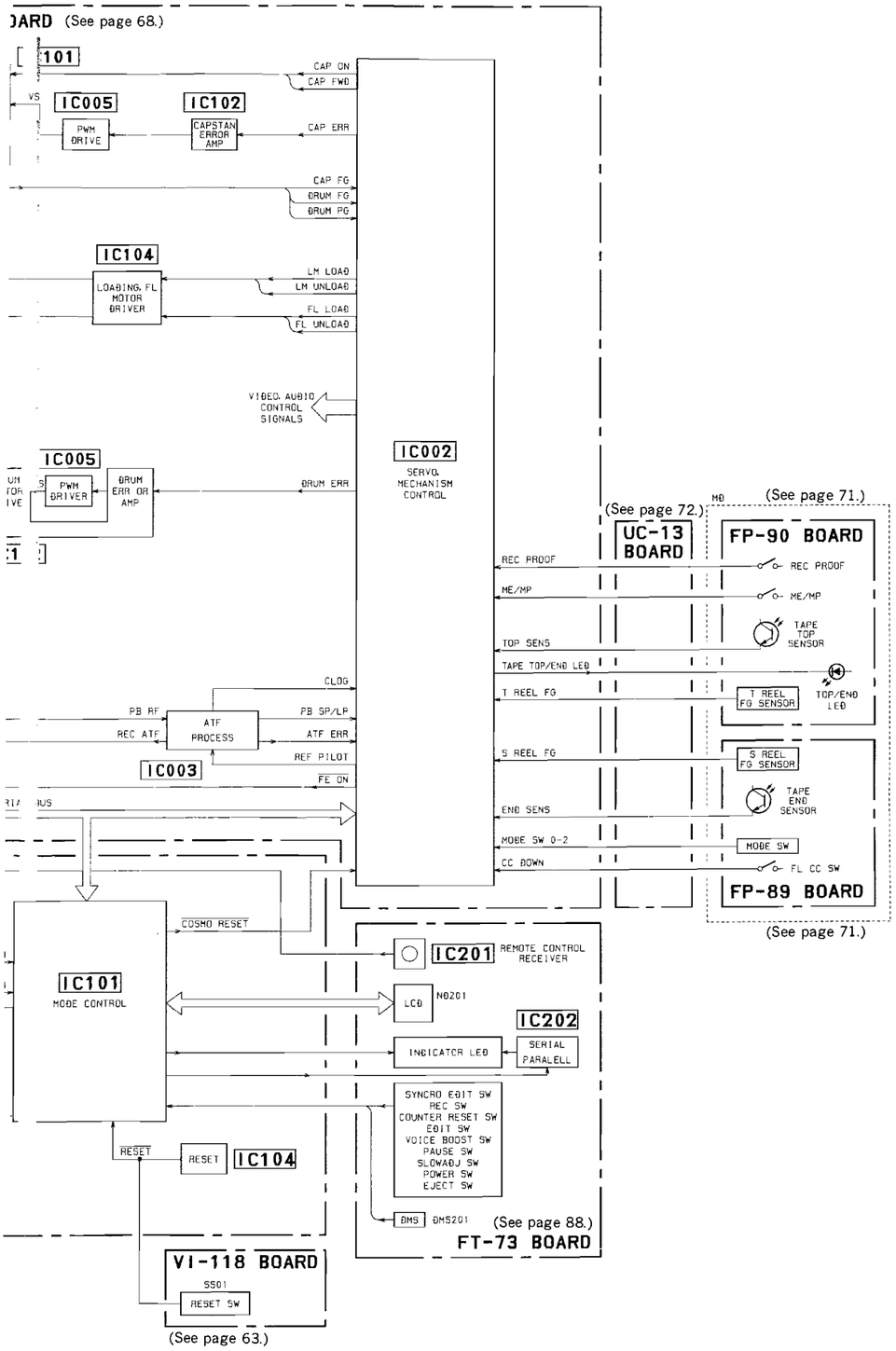
ARD (See page 68.)
101
CAP ON
CAP FWD
VS
IC005
PWM DRIVE
IC102
CAPSTAN ERROR AMP
CAP ERR
CAP FG
DRUM FG
DRUM PG
IC104
LOADING, FL MOTOR DRIVER
LM LOAD
LM UNLOAD
FL LOAD
FL UNLOAD
VIDEO, AUDIO CONTROL SIGNALS
IC005
PWM DRIVER
DRUM ERR OR AMP
DRUM ERR
IC002
SERVO MECHANISM CONTROL
CLOG
PB RF
REC ATF
ATF PROCESS
PB SP/LP
ATF ERR
REF PILOT
IC003
FE ON
(See page 72.)
UC-13 BOARD
MD
(See page 71.)
FP-90 BOARD
REC PROOF
REC PROOF
ME/MP
ME/MP
TAPE TOP SENSOR
TOP SENS
TAPE TOP/END LED
TOP/END LED
T REEL FG
T REEL FG SENSOR
S REEL FG
S REEL FG SENSOR
TAPE END SENSOR
END SENS
MODE SW 0-2
MODE SW
CC DOWN
FL CC SW
FP-89 BOARD
(See page 71.)
COSMO RESET
IC101
MODE CONTROL
IC201
REMOTE CONTROL RECEIVER
LC0
N0201
IC202
INDICATOR LED
SERIAL PARALELL
SYNCRO EDIT SW
REC SW
COUNTER RESET SW
EDIT SW
VOICE BOOST SW
PAUSE SW
SLOWADJ SW
POWER SW
EJECT SW
DMS
DMS201
(See page 88.)
FT-73 BOARD
RESET
RESET
IC104
VI-118 BOARD
S501
RESET SW
(See page 63.)

4-3. HEAD AMP BLOCK DIAGRAM

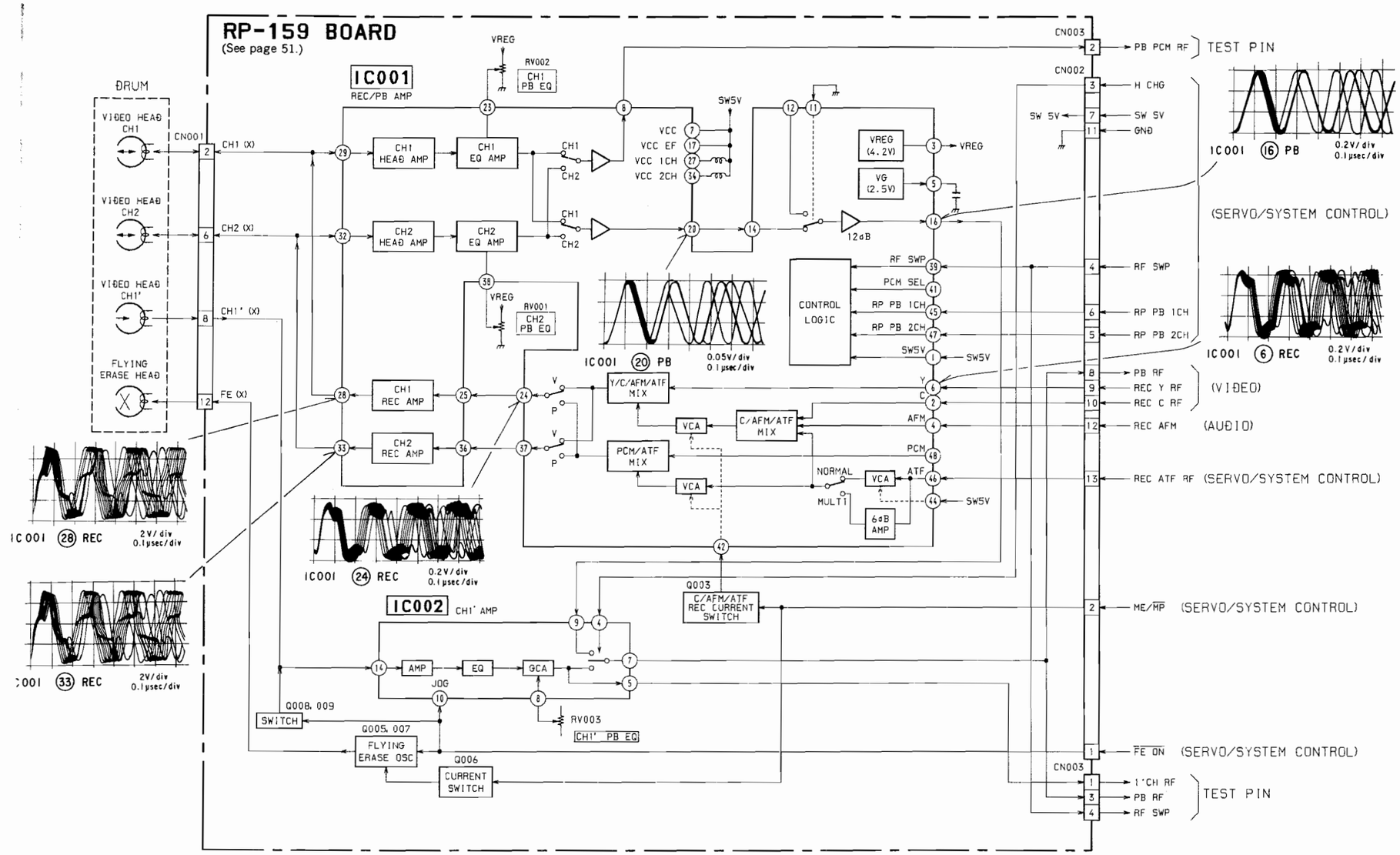

4-4. VIDEO BLOCK DIAGRAM

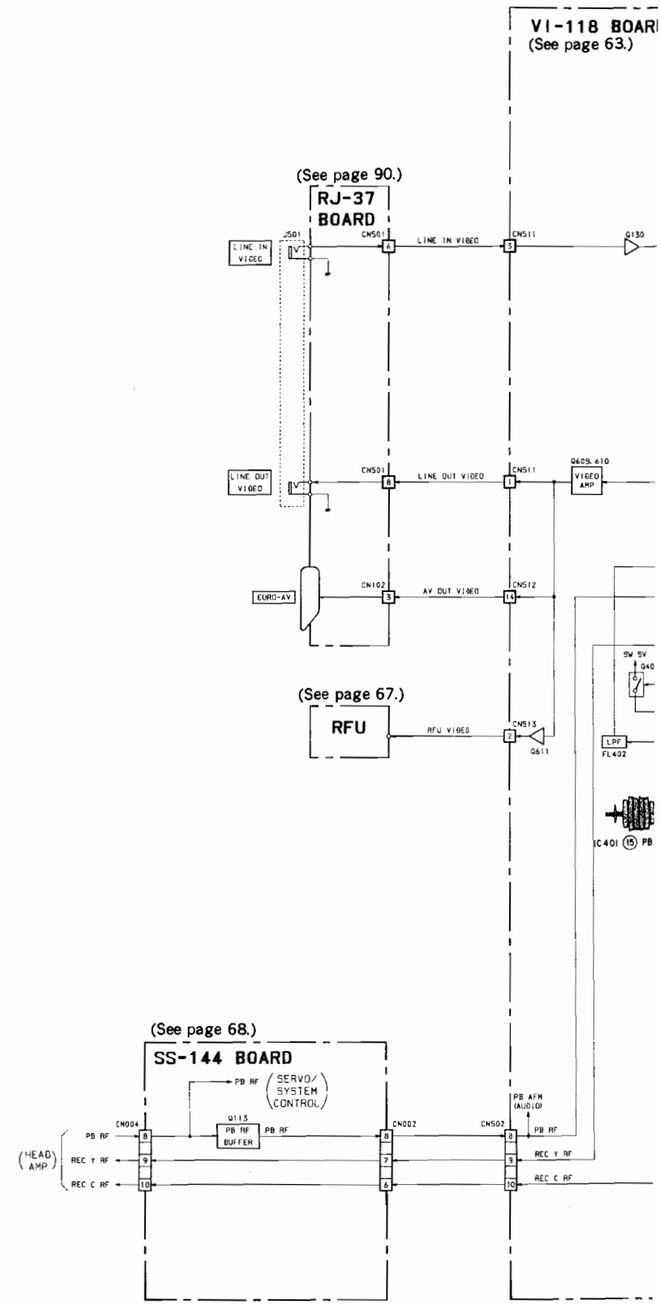

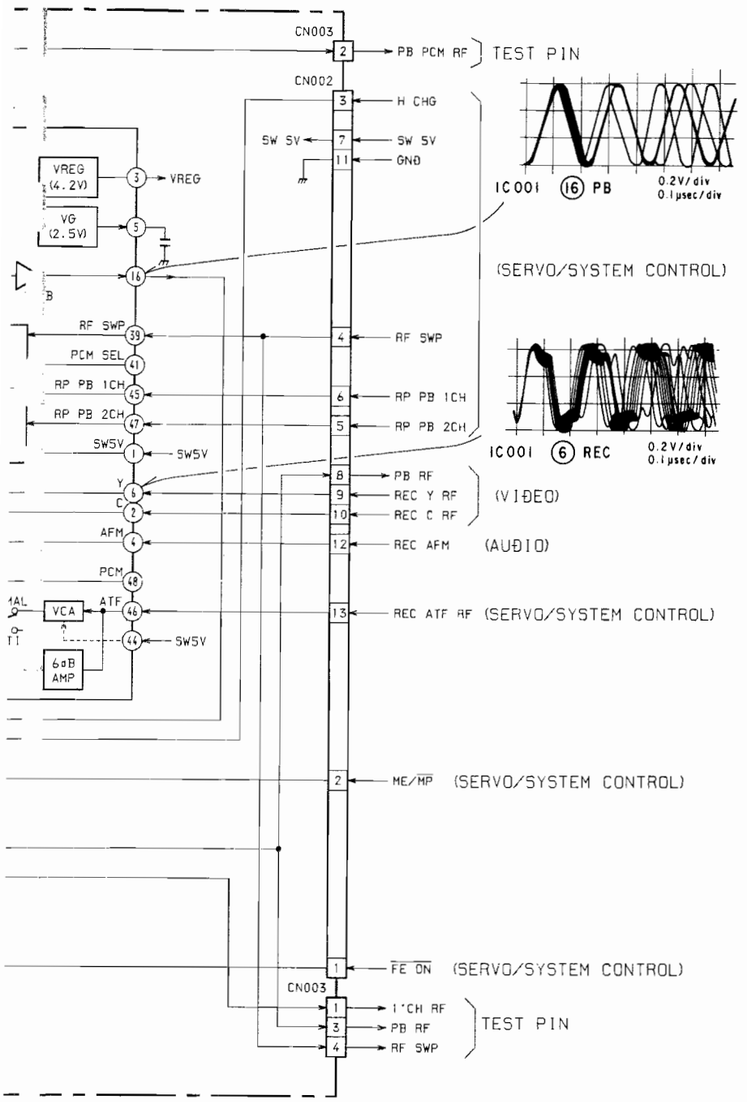

4-4. VIDEO BLOCK DIAGRAM

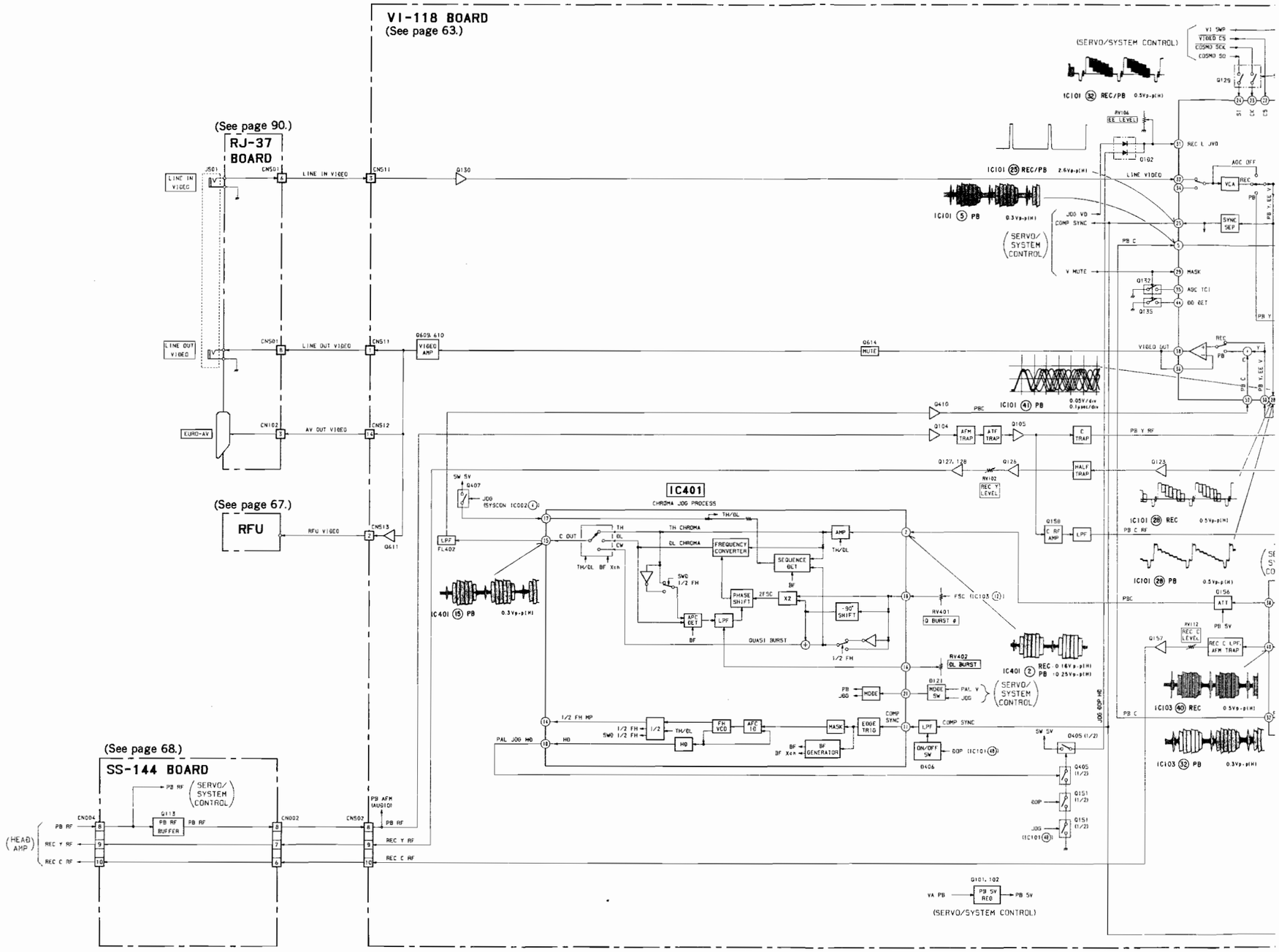

VI-118 BOARD

(See page 63.)

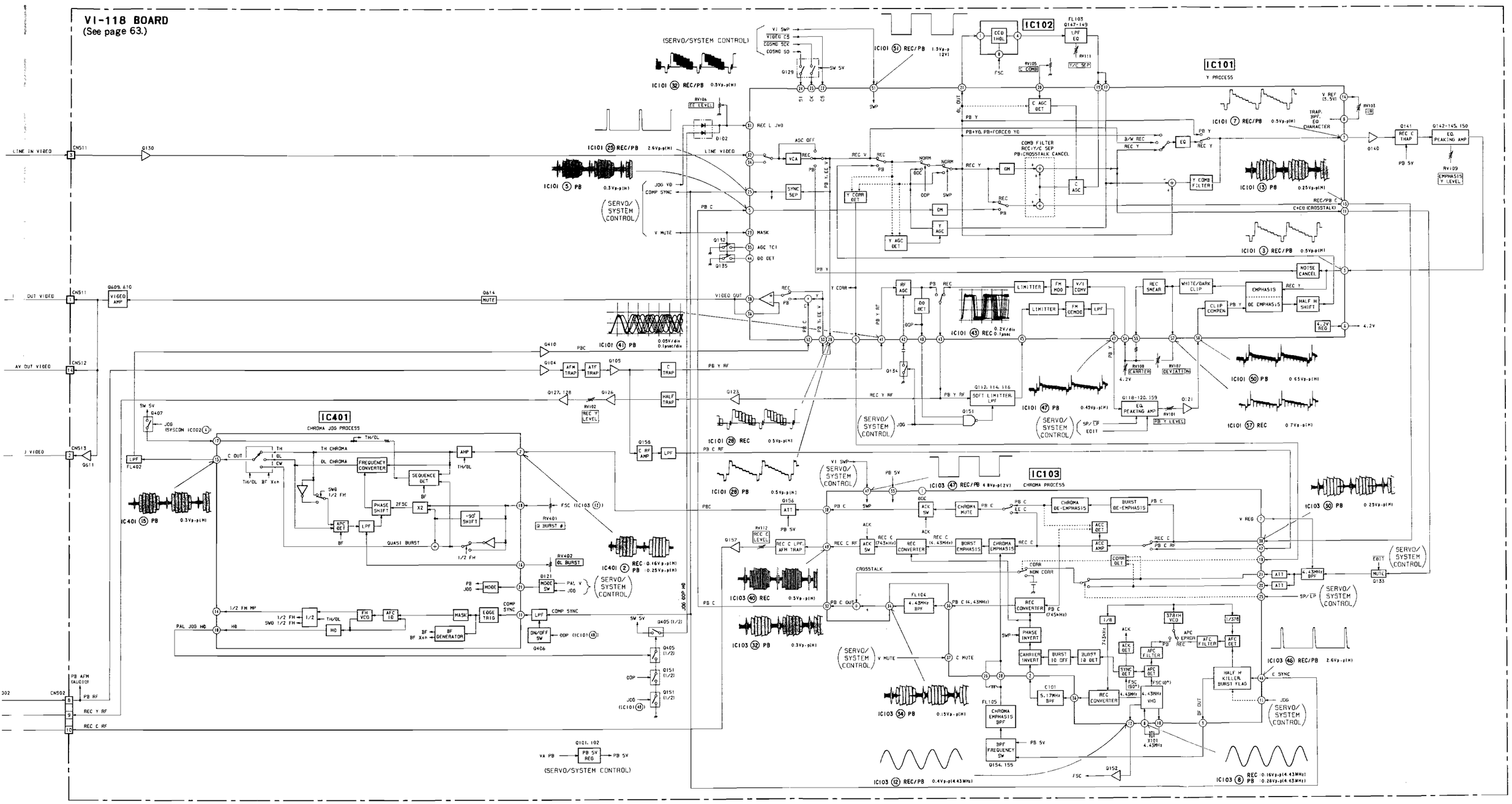

4-5. SERVO, SYSTEM CONTROL BLOCK DIAGRAM

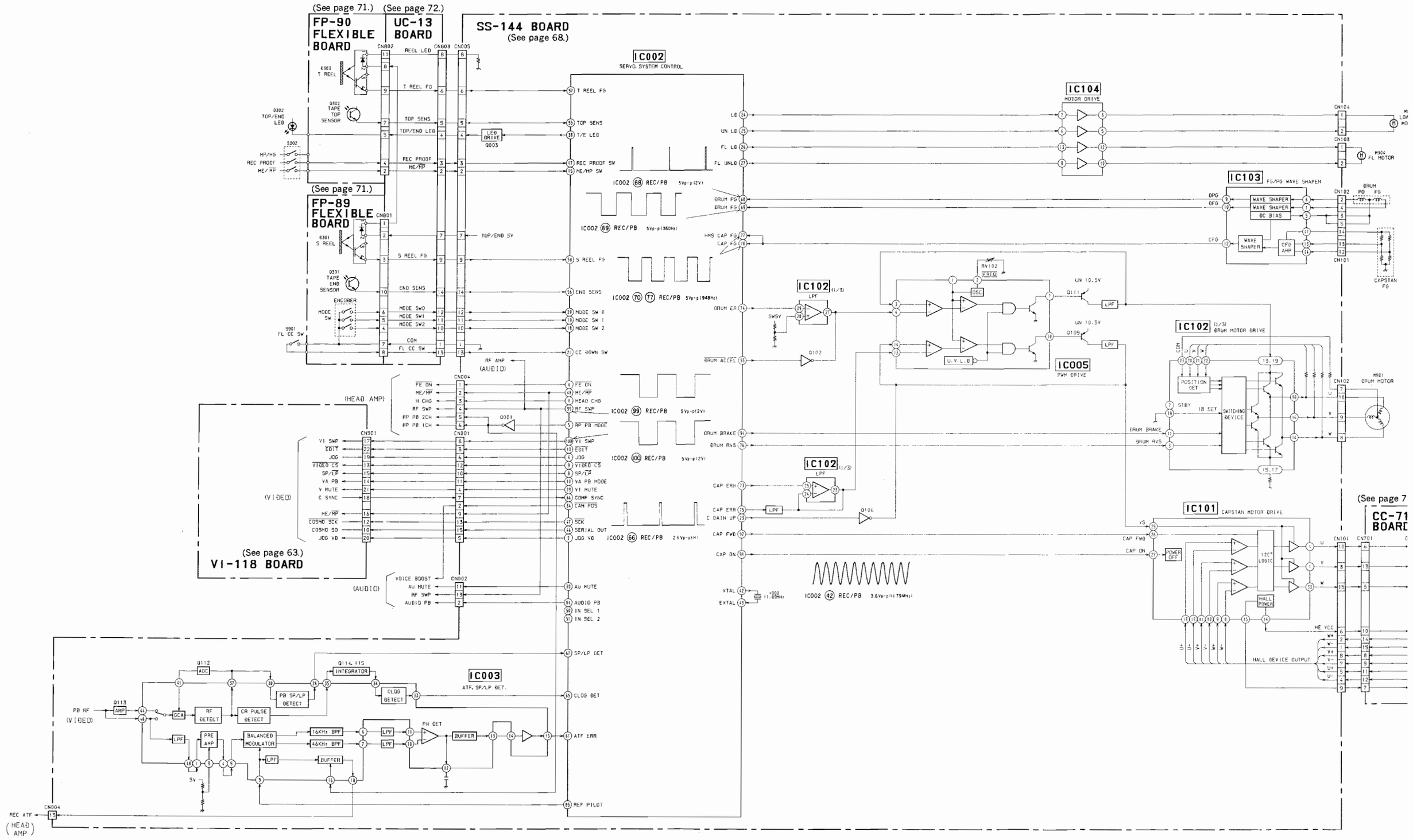

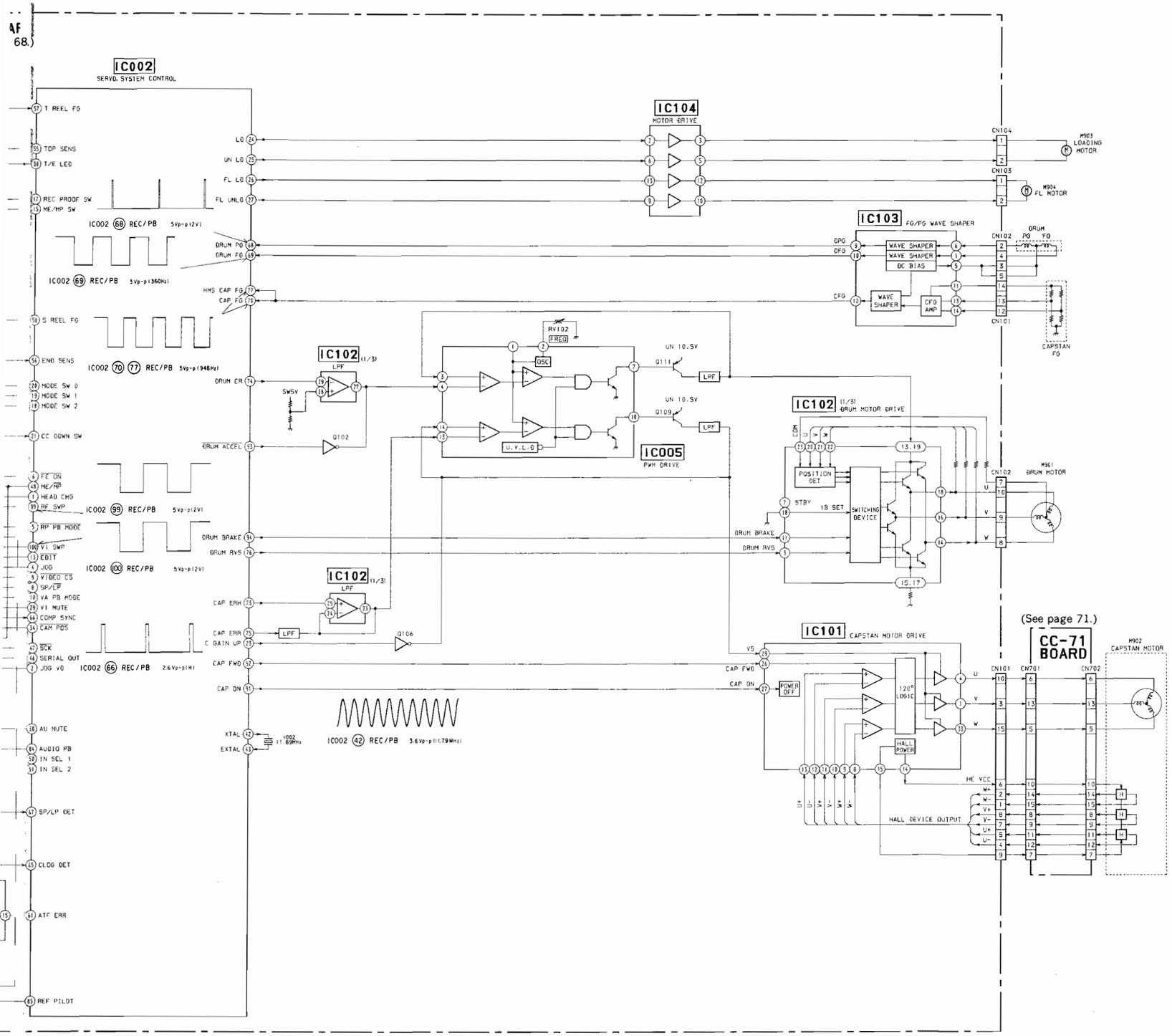
IC002
SERVO SYSTEM CONTROL
T REEL FG
TOP SENS
T/E LED
REC PROOF SW
ME/MP SW
IC002 (68) REC/PB 5Vp-p(2V)
IC002 (69) REC/PB 5Vp-p(360Hz)
S REEL FG
IC002 (70) (77) REC/PB 5Vp-p(948Hz)
END SENS
MODE SW 0
MODE SW 1
MODE SW 2
CC DOWN SW
FE ON
ME/MP
HEAD CHG
RF SWP
IC002 (99) REC/PB 5Vp-p(2V)
RP PB MODE
V1 SWP
EDIT
JOG
VIDEO CS
SP/LP
VA PB MODE
V1 MUTE
COMP SYNC
CAM POS
SCK
SERIAL OUT
JOG V0
IC002 (66) REC/PB 2.6Vp-p(1H)
AU MUTE
AUDIO PB
IN SEL 1
IN SEL 2
SP/LP DET
CLOG DET
ATF ERR
REF PILOT
LG
UN LG
FL LG
FL UNLG
DRUM PG
DRUM FG
HMS CAP FG
CAP FG
DRUM CR
DRUM ACCEL
DRUM BRAKE
DRUM RVS
CAP ERR
CAP ERR
C GAIN UP
CAP FWD
CAP ON
XTAL
EXTAL
IC002 (100) REC/PB 5Vp-p(2V)
IC002 (42) REC/PB 3.6Vp-p(11.79MHz)
IC104
MOTOR DRIVE
IC103
FG/PG WAVE SHAPER
WAVE SHAPER
WAVE SHAPER
DC BIAS
CFG
WAVE SHAPER
CFG AMP
IC102 (1/3)
LPF
SW5V
Q102
RV102
FREQ
OSC
U.V.L.O
UN 10.5V
Q111
Q109
LPF
IC005
PWM DRIVE
IC102 (1/3)
DRUM MOTOR DRIVE
POSITION DET
STBY
1B SET
SWITCHING DEVICE
IC101
CAPSTAN MOTOR DRIVE
POWER OFF
120° LOGIC
HALL POWER
HALL DEVICE OUTPUT
HE VCC
CN104
CN103
CN102
CN101
CN701
CN702
M901
LOADING MOTOR
M904
FL MOTOR
DRUM
PG
FG
CAPSTAN FG
M961
DRUM MOTOR
M902
CAPSTAN MOTOR
CC-71
BOARD

(See page 71.)

4-6. SYSTEM CONTROL — VIDEO BLOCK INTERFACE (SS-144 BOARD)

Signal	Pin No.	I/O	VTR MODE												
			STOP	FF	REW	×2	−×2	PB	PICTURE SEARCH		PB・PAUSE	SLOW	REVERSE SLOW	REC	REC PAUSE
									CUE	REVIEW					
SP/$\overline{LP}$	IC002 ⑧	O	* 1	H	H	* 1	* 2	* 2	* 2	* 2	* 1	* 1	* 1	* 11	H/L
V PB MODE	IC002 ⑩	O	L	L	L	H	H	H	H	H	H	H	H	L	L
JOG VD	IC002 ②	O	L	L	L	* 3	* 3	L	* 3	* 3	* 3	* 3	* 3	L	L
RP PB MODE	IC002 ⑤	O	L	L	L	L	L	L	L	L	L	L	L	H	L
$\overline{FE\ ON}$	IC002 ⑥	O	H	H	H	H	H	H	H	H	H	H	H	L	H
HEAD CHANGE	IC002 ①	O	L	L	L	* 4	* 4	L	L	L	* 4	* 4	* 4	L	L
VI SWP	IC002 ⑩⓪	O	L	* 6	* 6	* 5	* 5	* 6	* 6	* 6	* 5	* 5	* 5	* 6	* 6
RF SWP	IC002 ⑨⑨	O	L	* 6	* 6	* 6	* 6	* 6	* 6	* 6	* 6	* 6	* 6	* 6	* 6
JOG	IC002 ④	O	L	L	L	H	H	L	H	H	H	H	H	L	L
SP/$\overline{LP}$ DET	IC002 ⑥⑦	I	L	* 7	* 7	* 7	* 7	L	* 7	* 7	* 7	—	—	H	H
CLOG DET	IC002 ⑥⑤	I	H	* 8	* 8	* 8	* 8	* 8	* 8	* 8	* 8	* 8	* 8	H	* 8
COMP SYNC	IC002 ⑥⑥	I	* 9	* 9	* 9	* 9	* 9	* 9	* 9	* 9	* 9	* 9	* 9	* 9	* 9
AUDIO PB	IC002 ⑧④	O	L	L	L	* 10	* 10	H	* 10	* 10	H	* 10	* 10	L	L
AU MUTE	IC002 ③⓪	O	L	L	L	* 12	* 12	L	H	H	H	H	H	L	L
$\overline{VIDEO\ CS}$	IC002 ⑨	O	V-cycle"Low"pulse												
SO BUS	IC002 ④⑥	O	V-cycle pulse rank												
SCK	IC002 ④⑦	O	V-cycle"Low"pulse rank												

* 1. This outputs the result of determining what was the previous mode. "High" output in SP mode,"Low" output in LP mode.
* 2. This outputs the result of determining which record mode the playback tape has.
* 3. Pseudo VD signal
* 4. "High" when the HEAD for special playback is selected.
* 5. Output pulse to supply the OR of HEAD CHANGE and RF SWP.
* 6. Pulse of 25Hz,50% duty (synchronized with the rotation of the drum).
* 7. "High" at the SP record portion and "Low" at the LP record portion of tape.
* 8. "High" at the blank portion or at any drop out portion of tape. Head clogging detection input.
* 9. Composite synch signal input separated from line input video signal,camera video signal or playback video signal. (This signal has positive polarity).
* 10. "Low" during shuttle editing from REC PAUSE,"High" while in any other mode.
* 11. This varies according to SP/LP switching. It becomes "High" when SP mode is entered and "Low" when LP mode is entered.
* 12. "Low" during ON of audio when ×2 speed playback, "High" during OFF.

Di C EVIEW	PB・ PAUSE	SLOW	REVERSE SLOW	REC	REC PAUSE
*	* 1	* 1	* 1	* 11	H/L
	H	H	H	L	L
* 3	* 3	* 3	* 3	L	L
	L	L	L	H	L
H	H	H	H	L	H
I	* 4	* 4	* 4	L	L
*	* 5	* 5	* 5	* 6	* 6
* 6	* 6	* 6	* 6	* 6	* 6
H	H	H	H	L	L
*	* 7	—	—	H	H
* 8	* 8	* 8	* 8	H	* 8
*	* 9	* 9	* 9	* 9	* 9
*	H	* 10	* 10	L	L
H	H	H	H	L	L

" lse
e nk
ulse rank

ti or at any drop out portion of tape.
input.
in t separated from line input video signal, camera video signal
l. This signal has positive polarity).
iting from REC PAUSE, "High" while in any other mode.
SP/LP switching. It becomes "High" when SP mode is entered
de s entered.
di when ×2 speed playback, "High" during OFF.

4-7. MECHANICAL CONTROL — SERVO BLOCK INTERFACE (SS-144 BOARD)

Signal	Pin No.	I/O	VTR MODE												
			STOP	FF	REW	×2	-×2	PB	PICTURE SEARCH		PB・PAUSE	SLOW	REVERSE SLOW	REC	REC PAUSE
									CUE	REVIEW					
T.REEL FG	IC002 ㊼	I	—	*1	*1	*1	*1	*1	*1	*1	—	*1	*1	*1	—
S.REEL FG	IC002 ㊽	I	—	*1	*1	*1	*1	*1	*1	*1	—	*1	*1	*1	—
ATF ERROR	IC002 ㊶	I	—	*2	*2	*2	*2	*2	*2	*2	*2	*2	*2	*2	*2
DRUM PG	IC002 ㊽	I	—	*3	*3	*3	*3	*3	*3	*3	*3	*3	*3	*3	*3
DRUM FG	IC002 ㊾	I	—	*4	*4	*4	*4	*4	*4	*4	*4	*4	*4	*4	*4
CAP FG/HMS CAP FG	IC002 ㊿ ㊼	I	—	*5	*5	*5	*5	*5	*5	*5	—	*5	*5	*5	—
CAP ON	IC002 ㊶	O	L	H	H	H	H	H	H	H	L	*8	*8	H	L
REF PILOT	IC002 ㊺	O	*7	*6	*6	*6	*6	*6	*6	*6	*6	*6	*6	*6	*6
RP PB MODE	IC002 ⑤	O	L	L	L	L	L	L	L	L	L	L	L	H	L
DRUM FWD/$\overline{\text{RVS}}$ *11	IC002 ㊻	O	H	H	H	H	H	H	H	H	H	H	H	H	H
CAP FWD/$\overline{\text{RVS}}$	IC002 ㊷	O	L	H	L	H	L	H	H	L	L	*8	*9	H	L
DRUM ERR	IC002 ㊹	O	*10	*10	*10	*10	*10	*10	*10	*10	*10	*10	*10	*10	*10
CAP ERR	IC002 ㊺	O	L	*10	*10	*10	*10	*10	*10	*10	L	*10	*10	*10	L
DRUM ON *12	IC002 ㊷	O	L	H	H	H	H	H	H	H	H	H	H	H	H

* 1. The amplitude modulated pulse is input by the rotation of the reel. (200msec period during REC/PB mode)
* 2. ATF error voltage input.
* 3. One PG pulse is input by one rotation of the drum. Approximately 45Hz.
* 4. Six FG pulses are input by one rotation of the drum. Approximately 270Hz.
* 5. 360 FG pulses are input by one rotation of the capstan. Approximately 820Hz during REC/PB (SP) mode.
* 6. Four frequencies are output as synchronized with the rotation of the drum. f1=101.02kHz, f2=117.19kHz, f3=162.76kHz, f4=146.45kHz
* 7. f2 (117.19kHz) is output.
* 8. "High" pulse when tape is delivered.
* 9. "Low" pulse when tape is delivered.
* 10. PWM signal with a period of 21.5 μ sec.
* 11. Normally "High". Temporarily "Low" when a full top cassette is loaded (drum reverse rotation).
* 12. The "High" level is at approximately 1.3Vdc.

MODE / E. SCH / REVIEW	PB • PAUSE	SLOW	REVERSE SLOW	REC	REC PAUSE
* 1	—	* 1	* 1	* 1	—
* 1	—	* 1	* 1	* 1	—
* 2	* 2	* 2	* 2	* 2	* 2
* 3	* 3	* 3	* 3	* 3	* 3
* 4	* 4	* 4	* 4	* 4	* 4
* 5	—	* 5	* 5	* 5	—
H	L	* 8	* 8	H	L
* 6	* 6	* 6	* 6	* 6	* 6
L	L	L	L	H	L
H	H	H	H	H	H
L	L	* 8	* 9	H	L
* 10	* 10	* 10	* 10	* 10	* 10
* 10	L	* 10	* 10	* 10	L
H	H	H	H	H	H

output.
tape is delivered.
ap is delivered.
p iod of 21.5 μ sec.
Temporarily "Low" when a full top cassette is loaded (drum reverse
approximately 1.3Vdc.

4-8. MECHANICAL CONTROL MICROCOMPUTER CXP80624 (SS-144 BOARD IC002) PORT FUNCTION DESCRIPTION

Pin No.	Signal	I/O	Function
1	HEAD CHG	O	HEAD CHANGE Signal.
2	JOG VD	O	Pseudo VD signal to be inserted into playback video signal when speed change playback is performed.
3	N. C.	—	Not used.
4	JOG	O	Speed change playback/normal playback select signal for the video circuit. "High" to select speed change playback.
5	RP PB MODE	O	REC/PB select signal for REC/PB amplifier (RP-159 board IC001) and ATF servo IC (SS-144 board IC003). "High" to select PB mode.
6	$\overline{\text{FE ON}}$	O	Flying erase oscillation ON/OFF control signal. "Low" to activate the oscillation.
7	INT VD OUT	O	Timing reference for serial data communication. V-cycle "Low" pulse.
8	SP/$\overline{\text{LP}}$	O	SP/LP select signal. "Low" to select LP.
9	$\overline{\text{VIDEO CS}}$	O	Serial data communication chip select signal to the video IC. V-Sycle "Low" pulse.
10	VA PB MODE	O	REC/PB select signal for the video circuit. "High" for PB mode.
11	MACRO DET	I	Not used.
12	10/7 SW	I	Not used.
13	$\overline{\text{EDIT}}$	O	Video circuit characteristic select signal.
14	VIRS	O	Not used.
15	ME/$\overline{\text{MP}}$ SW	I	ME/MP switch input. "Low" for MP, "High" for ME.
16	MP/HG SW	I	Not used.
17	REC PROOF SW	I	REC PROOF switch input. "High" for protected REC.
18	MODE SW 2	I	Mechanical deck MATRIX input.
19	MODE SW 1	I	Mechanical deck MATRIX input.
20	MODE SW 0	I	Mechanical deck MATRIX input.
21	CC DOWN SW	I	Cassette compartment down switch input. "Low" for lock.
22	10/13 SW	I	Not used.
23	CAP GAIN UP	O	Capstan speed control signal ("High" during FF/REW mode).
24	LOAD	O	Loading motor control signal. "High" or "High" pulse output to allow loading.
25	UNLOAD	O	Loading motor control signal. "High" or "High" pulse output to allow unloading.
26	FL M LOAD	O	Front loading motor control signal. "High" or "High" pulse output to allow loading.
27	FL M UNLD	O	Front loading motor control signal. "High" or "High" pulse output to allow unloading.
28	N. C.	—	Not used.
29	VI MUTE	O	Video mute signal.
30	AUDIO MUTE	O	Audio mute signal.
31	N.C.	—	Not used.
32	N.C.	—	Not used.
33	COPY	O	Not used.
34	$\overline{\text{CAM POS}}$	O	Voice boost select signal. "Low" to turn on.
35	PAL V	O	Not used.
36	HI8/$\overline{\text{NORMAL}}$	O	Not used.
37	N.C.	—	Not used.
38	TOP END LED	O	ON/OFF signal for TAPE TOP/END LED.
39	MP	—	Connected to GND.
40	$\overline{\text{COSMO RESET}}$	I	Reset signal. "Low" to reset.
41	VSS	—	GND
42	XTAL	O	11.72MHz clock oscillation circuit.
43	EXTAL	I	

Pin No.	Signal	I/O	Function
44	$\overline{\text{COSMO CS}}$	I	Clip select signal from the mode control microcomputer. V-cycle "Low" pulse.
45	SERIAL IN	I	Serial date input.
46	SERIAL OUT	O	Serial date output.
47	$\overline{\text{SCK}}$	O	Serial clock output.
48	ME/$\overline{\text{MP}}$	O	ME/MP select signal output. "Low" when MP Tape is used.
49	N. C.	—	GND
50	INSEL 1	O	Not used.
51	INSEL 2	O	Not used.
52	A VSS	—	GND
53	AVREF	—	Analog board reference voltage. Connected to +5V.
54	AVDD	—	Analog board power (+5V).
55	TOP SENS	I	Tape top sensing signal. This is normally "Low" and switches to "High" pulse input at tape top.
56	END SENS	I	Tape end sensing signal. This is normally "Low" and switches to "High" pulse input at tape end.
57	T REEL FG	I	T reel FG signal input.
58	S REEL FG	I	S reel FG signal input.
59	HI8 DET	I	Not used.
60	AFM MODE DET	I	Not used.
61	ATF ERROR	I	ATF error, ATF lock error input.
62	$\overline{\text{S SW 3}}$	I	Not used.
63	$\overline{\text{S SW 2}}$	I	Not used.
64	$\overline{\text{S SW 1}}$	I	Not used.
65	CLOG DET	I	This determines whether playback RF is present or not. "Low" under normal condition.
66	COMP SYNC	I	Composite sync signal separated form record/playback Y signal.
67	SP/$\overline{\text{LP}}$ DET	I	This determines which record mode the playback tape has when CUE/REVIEW/FF/REW mode is entered.
68	DRUM PG	I	Drum PG signal input. Used for the drum phase servo. 22.2msec periodic "High" pulse.
69	DRUM FG	I	Drum FG signal input. Used for the drum speed servo. 3.7msec periodic pulse.
70	CAP FG	I	Capstan FG signal input. Approximately 948Hz during REC/PB mode for the capstan speed servo.
71	N. C.	—	+5V power.
72	DRUM ON	O	Not used.
73	CAP ERR H	O	Not used.
74	DRUM ERR	O	Drum error signal output.
75	CAP ERR	O	Capstan error signal output. 20.15μsec PWM signal.
76	$\overline{\text{DRUM}}$ FWD/ $\overline{\text{RVS}}$	O	Drum rotational direction control signal. Normally "High".
77	HMS CAP FG	O	Capstan FG signal input. Used tape counter.
78	N.C.	I	+5V power.
79	MPHG/$\overline{\text{MP}}$	O	Not used.
80	S/$\overline{\text{VIDEO}}$	O	Not used.
81	N.C.	—	Not used.
82	AFM OUTSEL	O	Not used.
83	AFM MODE	O	Not used.

Pin No.	
84	A
85	F
86	N
87	N
88	V
89	V
90	V
91	C
92	C
93	D
94	D
95	P
96	P
97	F
98	P
99	R
100	V

Pin No.	Signal	I/O	Function
44	$\overline{\text{COSMO CS}}$	I	Clip select signal from the mode control microcomputer. V-cycle "Low" pulse.
45	SERIAL IN	I	Serial date input.
46	SERIAL OUT	O	Serial date output.
47	$\overline{\text{SCK}}$	O	Serial clock output.
48	ME/$\overline{\text{MP}}$	O	ME/MP select signal output. "Low" when MP Tape is used.
49	N. C.	—	GND
50	INSEL 1	O	Not used.
51	INSEL 2	O	Not used.
52	A VSS	—	GND
53	AVREF	—	Analog board reference voltage. Connected to +5V.
54	AVDD	—	Analog board power (+5V).
55	TOP SENS	I	Tape top sensing signal. This is normally "Low" and switches to "High" pulse input at tape top.
56	END SENS	I	Tape end sensing signal. This is normally "Low" and switches to "High" pulse input at tape end.
57	T REEL FG	I	T reel FG signal input.
58	S REEL FG	I	S reel FG signal input.
59	HI8 DET	I	Not used.
60	AFM MODE DET	I	Not used.
61	ATF ERROR	I	ATF error, ATF lock error input.
62	$\overline{\text{S SW 3}}$	I	Not used.
63	$\overline{\text{S SW 2}}$	I	Not used.
64	$\overline{\text{S SW 1}}$	I	Not used.
65	CLOG DET	I	This determines whether playback RF is present or not. "Low" under normal condition.
66	COMP SYNC	I	Composite sync signal separated form record/playback Y signal.
67	SP/$\overline{\text{LP}}$ DET	I	This determines which record mode the playback tape has when CUE/REVIEW/FF/REW mode is entered.
68	DRUM PG	I	Drum PG signal input. Used for the drum phase servo. 22.2msec periodic "High" pulse.
69	DRUM FG	I	Drum FG signal input. Used for the drum speed servo. 3.7msec periodic pulse.
70	CAP FG	I	Capstan FG signal input. Approximately 948Hz during REC/PB mode for the capstan speed servo.
71	N. C.	—	+5V power.
72	DRUM ON	O	Not used.
73	CAP ERR H	O	Not used.
74	DRUM ERR	O	Drum error signal output.
75	CAP ERR	O	Capstan error signal output. 20.15μsec PWM signal.
76	$\overline{\text{DRUM}}$ FWD/ $\overline{\text{RVS}}$	O	Drum rotational direction control signal. Normally "High".
77	HMS CAP FG	O	Capstan FG signal input. Used tape counter.
78	N.C.	I	+5V power.
79	MPHG/$\overline{\text{MP}}$	O	Not used.
80	S/$\overline{\text{VIDEO}}$	O	Not used.
81	N.C.	—	Not used.
82	AFM OUTSEL	O	Not used.
83	AFM MODE	O	Not used.

Pin No.	Signal	I/O	Function
84	AUDIO PB	O	REC/PB select signal for the audio circuit. "High" for PB mode.
85	REF PILOT	O	Reference pilot signal for the ATF seruo. Four frequencies are selectively switched from one to another as synchronized with the rotation of the drum. f_1=101.02kHz, f_2=117.19kHz, f_3=162.76kHz, f_4=146.45kHz.
86	N. C.	—	N. C
87	N. C.	—	Connected to GND.
88	VSS	—	GND.
89	VDD	—	+5V power.
90	VPP	—	+5V power.
91	CAP ON	O	Capstan driver ON/OFF control signal. "High" to turn capstan ON.
92	CAP FWD/RVS	O	Capstan rotational direction control signal. "High" for FWD. "Low" for RVS.
93	DRUM ACCEL	O	Drum acceleration pulse.
94	DRUM BRAKE	O	Drum deceleration pulse.
95	PCM AFREC	O	Not used.
96	PCM REC INH	O	Not used.
97	FE RA	O	Not used.
98	PCM PB	O	Not used.
99	RF SWP	O	RF switching pulse signal.25Hz,50% duty pulse.
100	VI SWP	O	Video switching pulse.

4-9. MODE CONTROL MICRO COMPUTER MB89093 (LC-38 BOARD IC101) PORT FUNCTION DESCRIPTION

Pin No.	Signal	I/O	Function
1	TEST MODE 1	I	Connected to GND.
2	TEST MODE 2	I	Connected to GND.
3	X0		System clock (10MHz).
4	X1		System clock (10MHz).
5	VSS	I	+5V power.
6	$\overline{\text{RESET}}$	I	Reset input.
7	PAL/$\overline{\text{NT}}$	I	PAL/NTSC select. "Low" for NTSC.
8	J/$\overline{\text{UC}}$	I	J/UC select.
9—15	N.C.	I	No connected.
16	INT V	I	V synchronization signal input.
17	LANC POWER CONT	O	"Low" output when power off, LANC M.
18	$\overline{\text{LANC POWER ON}}$	I	LANC POWER control signal input.
19—22	N.C.	I	No connected.
23	MAIN LED	O	MAIN LED lighting up on "Low"
24	ST LED	O	STEREO LED lighting up on "Low".
25	VOICE BOOST LED	O	VOICE BOOST LED lighting up on "Low".
26	———	I	Connected to VCC.
27	N.C.	I	No connected.
28	SP DATA	O	Sift register. Data output.
29	SP CLK	O	Sift register. Clock output.
30	$\overline{\text{SIRCS IN}}$	I	SIRCS input.
31	SP STR	O	Sift register. Strobe output.
32	SP OE	O	Sift register. OE output.
33	SUB LED	O	SUB LED lighting up on "H"
34—46	N.C.	I	No connected.
47	VCC	I	+5V power.
48—55	S0—S7	O	LCD display SEGMENT signal output. 0—7
56	VSS	—	GND
57—64	S8—S15	O	LCD display SEGMENT signal output. 8—15
65—68	V3—V0	I	LCD drive power terminal.
69—71	C0—C2	O	LCD display common signal. 0—2
72	———	O	No connected.
73	N.C.	—	No connected.
74	$\overline{\text{COSMO CS}}$	O	Serial communication BUS.
75	TT SI	I	Serial communication BUS.
76	TT SO	O	Serial communication BUS.
77	$\overline{\text{TT SCK}}$	O	Serial communication BUS.
78	$\overline{\text{COSMO RST}}$	O	Serial communication BUS.
79	N.C.	—	No connect.
80	N.C.	—	No connect.
81	AVSS	—	Analog GND.
82—86	AD0—AD4	I	KEY input.
87	LANC S/M	I	LANC mode slave/master select. "Low" for slave.

Pin No.	Signal	I/O	Function
88	AD6	I	Not used.
89	RF SW POSI 1	I	RF SWP position adjustment VR1 input.
90	AVCC	—	Analog power.
91	RF SW POSI 2	I	RF SWP position adjustment VR2 input.
92	×2 ON	O	"H" output when ×2 mode.
93	TV/VTR	O	TV/VTR ANT select. "H" when VTR.
94	POWER ON	O	Power control signal. "H" when power is on.
95	LANC IN	I	LANC DATA input.
96	LANC OUT	O	LANC DATA output.
97	N.C.	—	No connected.
98	VCC	—	+5V power.
99	———	—	No connected.
100	———	—	No connected.

● A/D PORT ALLOCATION

- The A/D ports are allocated as shown below.

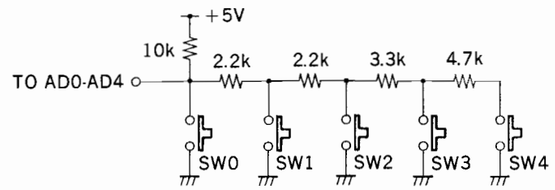

SW / AD	Pin No.	SW0 0.01 [V]	SW1 0.9 [V]	SW2 1.5 [V]	SW3 2.2 [V]	SW4 2.8 [V]	NO INPUT 5.0 [V]
AD0	82	POWER	EJECT	STOP	PLAY	——	——
AD1	83	DMS SW1	REC	COUNTER RESET	EDIT	SLOW/STILL ADJUST ▼	——
AD2	84	DMS SW2	PAUSE	SYNCHRO EDIT	SLOW/STILL ADJUST ▲	VOICE BOOST	——
AD3	85	DMS SW3	——	——	——	——	——
AD4	86	DMS SW4	——	——	——	——	——
AD5	87	CONTROL L S/M	——	——	——	——	——

- KEY input signals pass through the A/D ports as shown above.

4-10. MODE CONTROL BLOCK DIAGRAM

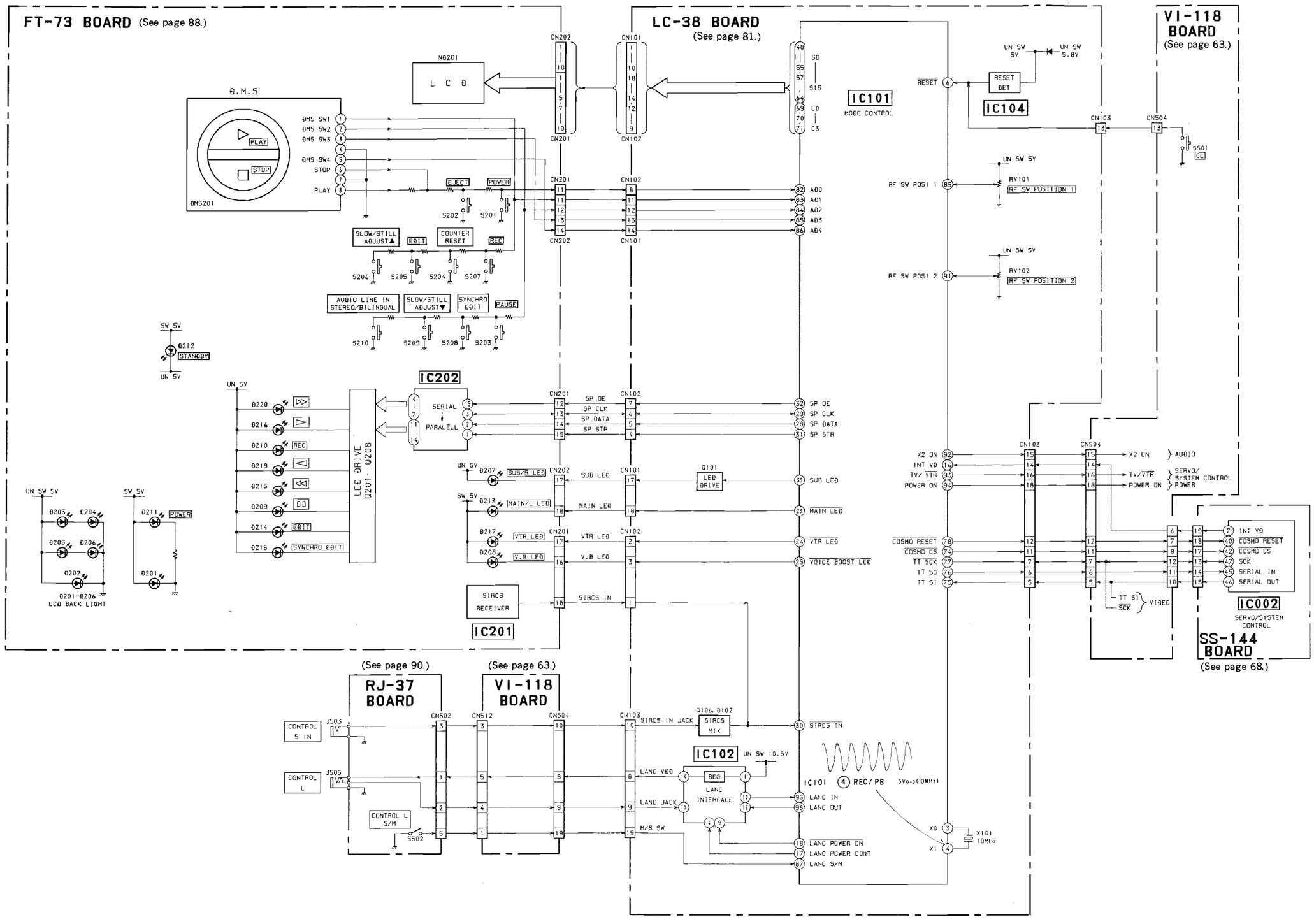

4-11. AUDIO BLOCK DIAGRAM

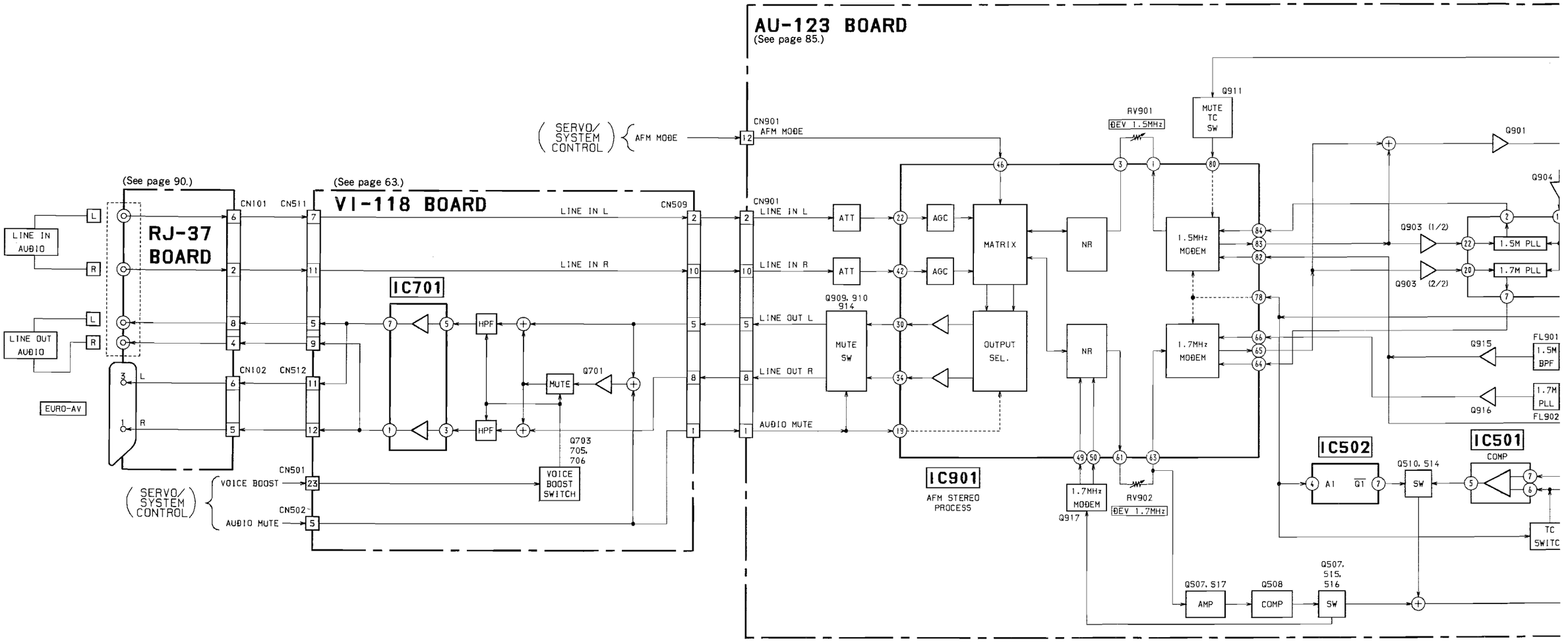

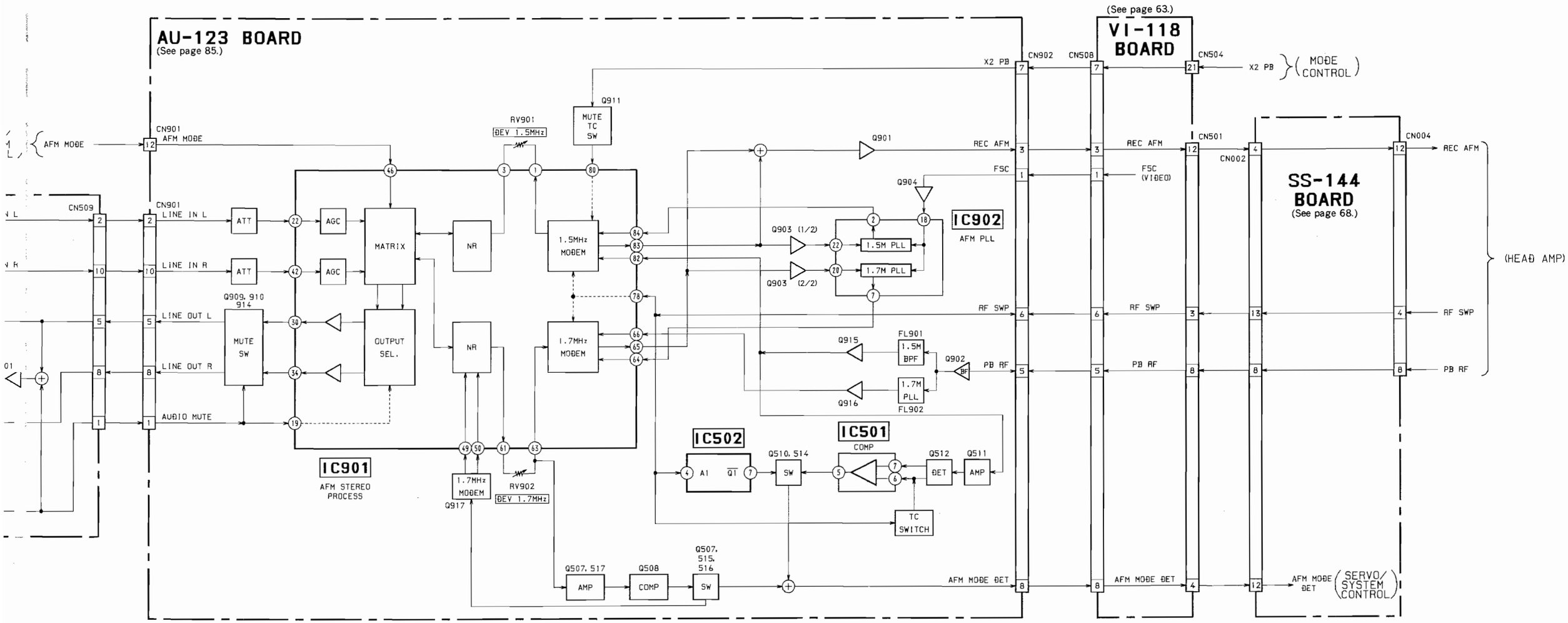
AU-123 BOARD
(See page 85.)
(See page 63.)
VI-118 BOARD
SS-144 BOARD
(See page 68.)
IC901
AFM STEREO PROCESS
IC902
AFM PLL
IC501
IC502
CN901 AFM MODE
CN509
CN901 LINE IN L
CN901 LINE IN R
LINE OUT L
LINE OUT R
AUDIO MUTE
ATT
AGC
MATRIX
NR
OUTPUT SEL.
MUTE SW
Q909, 910 914
1.5MHz MODEM
1.7MHz MODEM
RV901 DEV 1.5MHz
RV902 DEV 1.7MHz
Q911 MUTE TC SW
Q901
Q903 (1/2)
Q903 (2/2)
Q904
1.5M PLL
1.7M PLL
Q915
Q916
FL901 1.5M BPF
FL902 1.7M PLL
Q902
Q917
Q507, 517
Q508
Q507, 515, 516
AMP
COMP
SW
Q510, 514
Q512
Q511
DET
TC SWITCH
CN902
CN508
CN504
CN501
CN002
CN004
X2 PB
REC AFM
FSC
FSC (VIDEO)
RF SW
PB RF
AFM MODE DET
MODE CONTROL
(HEAD AMP)
SERVO/ SYSTEM CONTROL

4-12. POWER BLOCK DIAGRAM

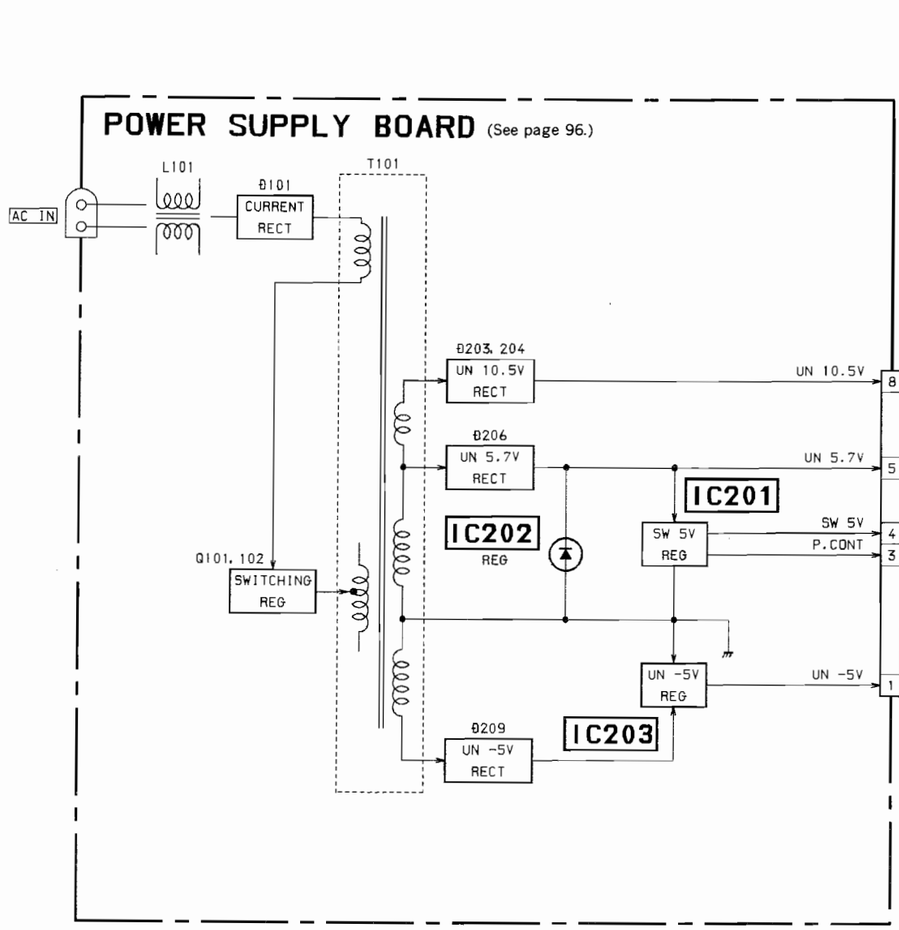

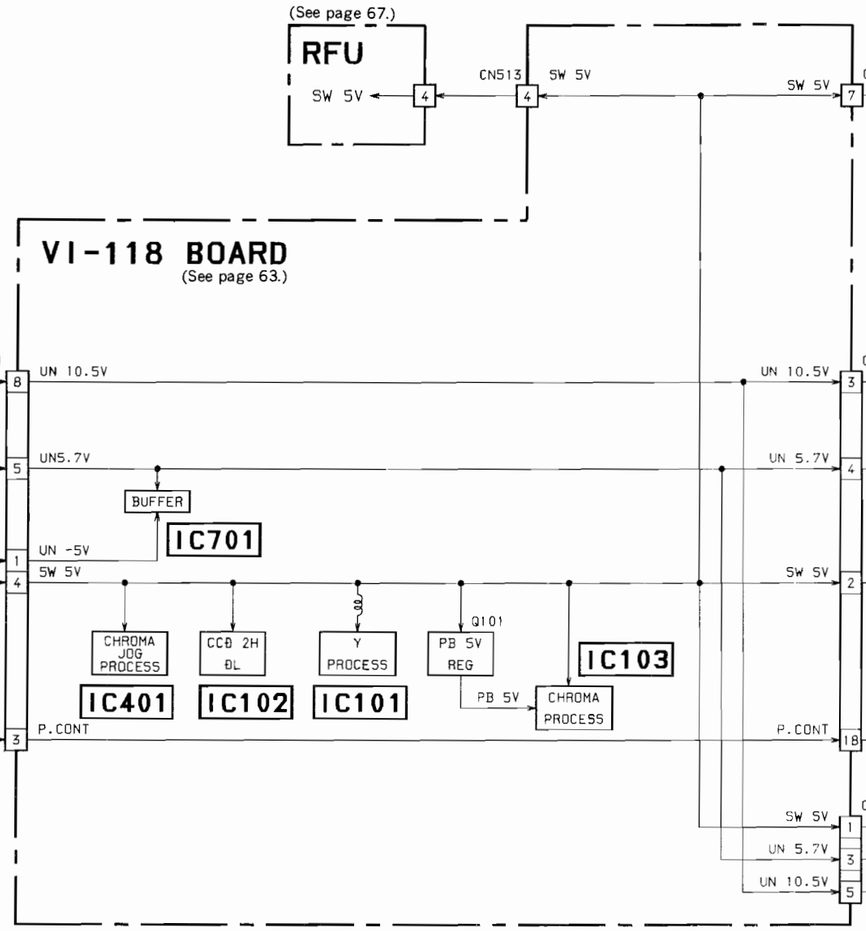

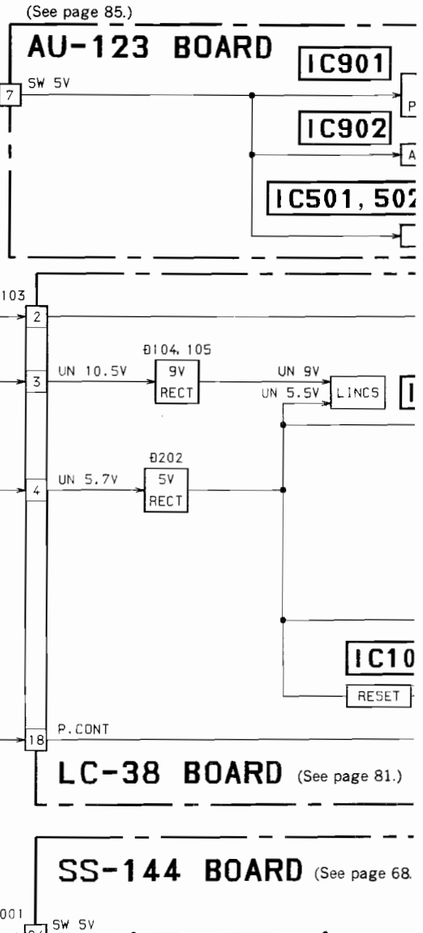

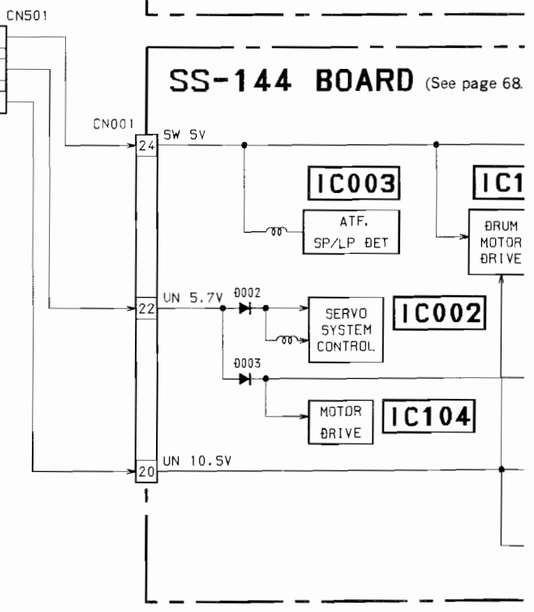

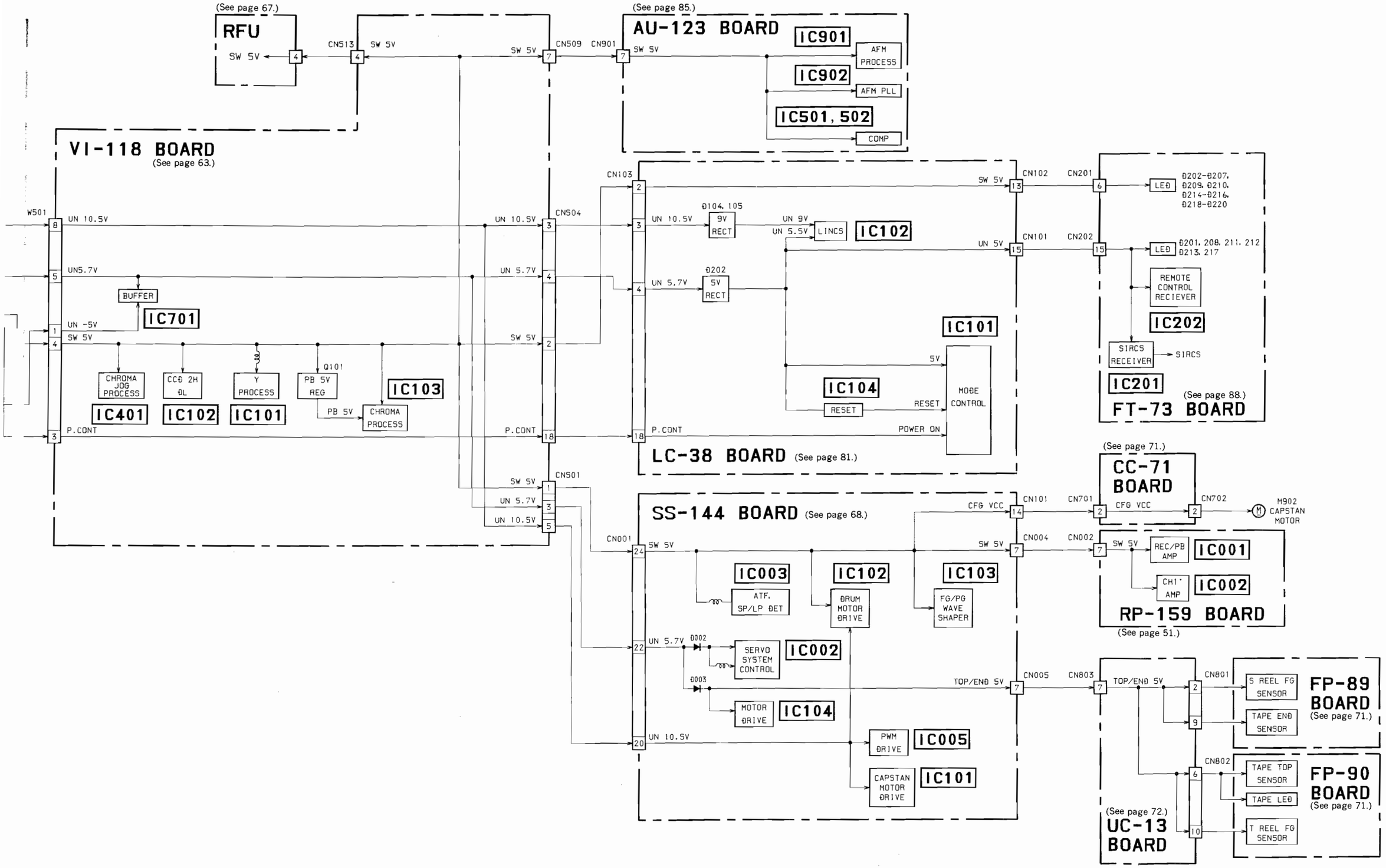
(See page 67.)
RFU
SW 5V
4
CN513
SW 5V
SW 5V
7
CN509
CN901
(See page 85.)
AU-123 BOARD
7
SW 5V
IC901
AFM PROCESS
IC902
AFM PLL
IC501, 502
COMP
VI-118 BOARD
(See page 63.)
W501
8
UN 10.5V
UN 10.5V
3
CN504
5
UN5.7V
UN 5.7V
4
BUFFER
IC701
1
UN -5V
4
SW 5V
SW 5V
2
CHROMA JOG PROCESS
IC401
CCD 2H ΦL
IC102
Y PROCESS
IC101
Q101
PB 5V REG
PB 5V
CHROMA PROCESS
IC103
3
P.CONT
P.CONT
18
CN103
2
3
4
UN 10.5V
Φ104, 105
9V RECT
UN 9V
UN 5.5V
LINCS
IC102
UN 5.7V
Φ202
5V RECT
SW 5V
13
CN102
CN201
6
LED
Φ202-Φ207, Φ209, Φ210, Φ214-Φ216, Φ218-Φ220
UN 5V
15
CN101
CN202
15
LED
Φ201, 208, 211, 212 Φ213, 217
REMOTE CONTROL RECIEVER
IC202
SIRCS RECEIVER
SIRCS
IC201
(See page 88.)
FT-73 BOARD
IC101
5V
IC104
RESET
RESET
MODE CONTROL
P.CONT
POWER ON
18
LC-38 BOARD
(See page 81.)
(See page 71.)
CC-71 BOARD
CN701
2
CFG VCC
CFG VCC
2
CN702
M902 CAPSTAN MOTOR
CN501
SW 5V
1
UN 5.7V
3
UN 10.5V
5
CN001
24
SW 5V
SW 5V
7
CN004
CN002
7
SW 5V
REC/PB AMP
IC001
CH1' AMP
IC002
RP-159 BOARD
(See page 51.)
IC003
ATF, SP/LP DET
IC102
DRUM MOTOR DRIVE
IC103
FG/PG WAVE SHAPER
CFG VCC
14
CN101
22
UN 5.7V
Φ002
SERVO SYSTEM CONTROL
IC002
Φ003
MOTOR DRIVE
IC104
TOP/END 5V
7
CN005
CN803
7
TOP/END 5V
2
CN801
S REEL FG SENSOR
TAPE END SENSOR
9
FP-89 BOARD
(See page 71.)
20
UN 10.5V
PWM DRIVE
IC005
CAPSTAN MOTOR DRIVE
IC101
CN802
6
TAPE TOP SENSOR
TAPE LED
FP-90 BOARD
(See page 71.)
(See page 72.)
UC-13 BOARD
10
T REEL FG SENSOR

SECTION 5
PRINTED WIRING BOARDS AND SCHEMATIC DIAGRAMS

5-1. FRAME SCHEMATIC DIAGRAM

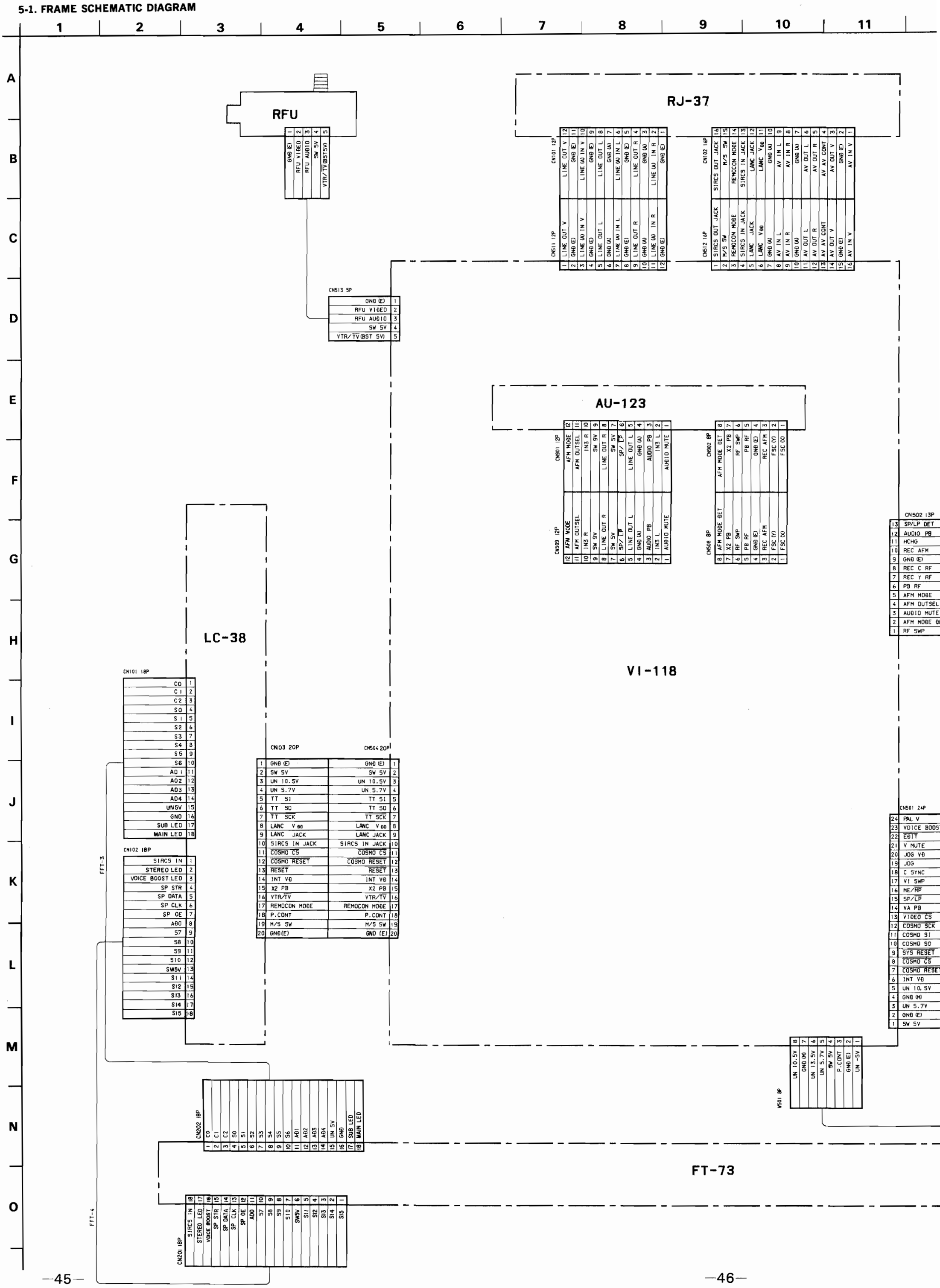

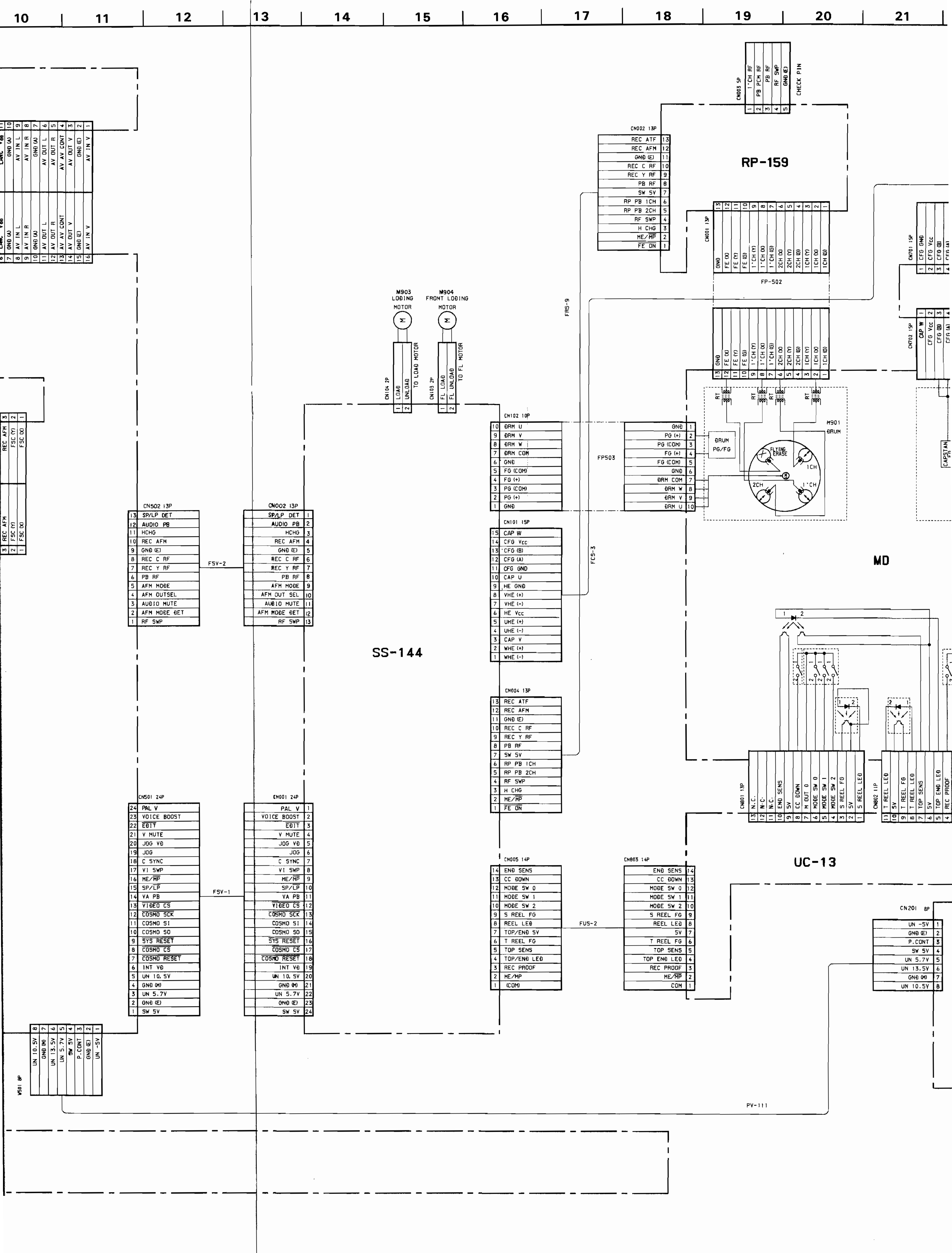
10
11
12
13
14
15
16
17
18
19
20
21
RP-159
CN003 5P
1'CH RF
PB PCM RF
PB RF
RF SWP
GND (E)
CHECK PIN
CN002 13P
REC ATF
REC AFM
GND (E)
REC C RF
REC Y RF
PB RF
SW 5V
RP PB 1CH
RP PB 2CH
RF SWP
H CHG
ME/MP
FE ON
CN001 13P
GND
FE (X)
FE (Y)
FE (G)
1'CH (Y)
1'CH (X)
1'CH (G)
2CH (X)
2CH (Y)
2CH (G)
1CH (Y)
1CH (X)
1CH (G)
FP-502
FRS-9
FCS-3
CN701 15P
CFG GND
CFG Vcc
CFG (B)
CFG (A)
CN702 15P
CAP W
CFG Vcc
CFG (B)
CFG (A)
CAPSTAN
M903
LODING
MOTOR
M904
FRONT LODING
MOTOR
CN104 2P
LOAD
UNLOAD
TO LOAD MOTOR
CN103 2P
FL LOAD
FL UNLOAD
TO FL MOTOR
CN102 10P
DRM U
DRM V
DRM W
DRM COM
GND
FG (COM)
FG (+)
PG (COM)
PG (+)
GND
FP503
PG (+)
PG (COM)
FG (+)
FG (COM)
DRM COM
DRM W
DRM V
DRM U
DRUM
PG/FG
RT
M901
DRUM
FLYING ERASE
1CH
2CH
1'CH
MD
CN101 15P
CAP W
CFG Vcc
CFG (B)
CFG (A)
CFG GND
CAP U
HE GND
VHE (+)
VHE (-)
HE Vcc
UHE (+)
UHE (-)
CAP V
WHE (+)
WHE (-)
SS-144
CN004 13P
REC ATF
REC AFM
GND (E)
REC C RF
REC Y RF
PB RF
SW 5V
RP PB 1CH
RP PB 2CH
RF SWP
H CHG
ME/MP
FE ON
CN502 13P
SP/LP DET
AUDIO PB
HCHG
REC AFM
GND (E)
REC C RF
REC Y RF
PB RF
AFM MODE
AFM OUTSEL
AUDIO MUTE
AFM MODE DET
RF SWP
FSV-2
CN002 13P
SP/LP DET
AUDIO PB
HCHG
REC AFM
GND (E)
REC C RF
REC Y RF
PB RF
AFM MODE
AFM OUT SEL
AUDIO MUTE
AFM MODE DET
RF SWP
CN501 24P
PAL V
VOICE BOOST
EDIT
V MUTE
JOG VD
JOG
C SYNC
V1 SWP
ME/MP
SP/LP
VA PB
VIDEO CS
COSMO SCK
COSMO SI
COSMO SO
SYS RESET
COSMO CS
COSMO RESET
INT VD
UN 10.5V
GND (M)
UN 5.7V
GND (E)
SW 5V
FSV-1
CN001 24P
PAL V
VOICE BOOST
EDIT
V MUTE
JOG VD
JOG
C SYNC
V1 SWP
ME/MP
SP/LP
VA PB
VIDEO CS
COSMO SCK
COSMO SI
COSMO SO
SYS RESET
COSMO CS
COSMO RESET
INT VD
UN 10.5V
GND (M)
UN 5.7V
GND (E)
SW 5V
CN005 14P
END SENS
CC DOWN
MODE SW 0
MODE SW 1
MODE SW 2
S REEL FG
REEL LED
TOP/END 5V
T REEL FG
TOP SENS
TOP/END LED
REC PROOF
ME/MP
(COM)
FUS-2
CN803 14P
END SENS
CC DOWN
MODE SW 0
MODE SW 1
MODE SW 2
S REEL FG
REEL LED
5V
T REEL FG
TOP SENS
TOP END LED
REC PROOF
ME/MP
COM
UC-13
CN801 13P
N.C.
N.C.
N.C.
END SENS
5V
CC DOWN
M OUT 0
MODE SW 0
MODE SW 1
MODE SW 2
S REEL FG
5V
S REEL LED
CN802 11P
T REEL LED
5V
T REEL FG
T REEL LED
TOP SENS
5V
TOP END LED
REC PROOF
CN201 8P
UN -5V
GND (E)
P.CONT
SW 5V
UN 5.7V
UN 13.5V
GND (M)
UN 10.5V
VS01 8P
UN 10.5V
GND (M)
UN 13.5V
UN 5.7V
SW 5V
P.CONT
GND (E)
UN -5V
PV-111
LANC VDD
GND (A)
AV IN L
AV IN R
GND (A)
AV OUT L
AV OUT R
AV AV CONT
AV OUT V
GND (E)
AV IN V
REC AFM
FSC (Y)
FSC (X)

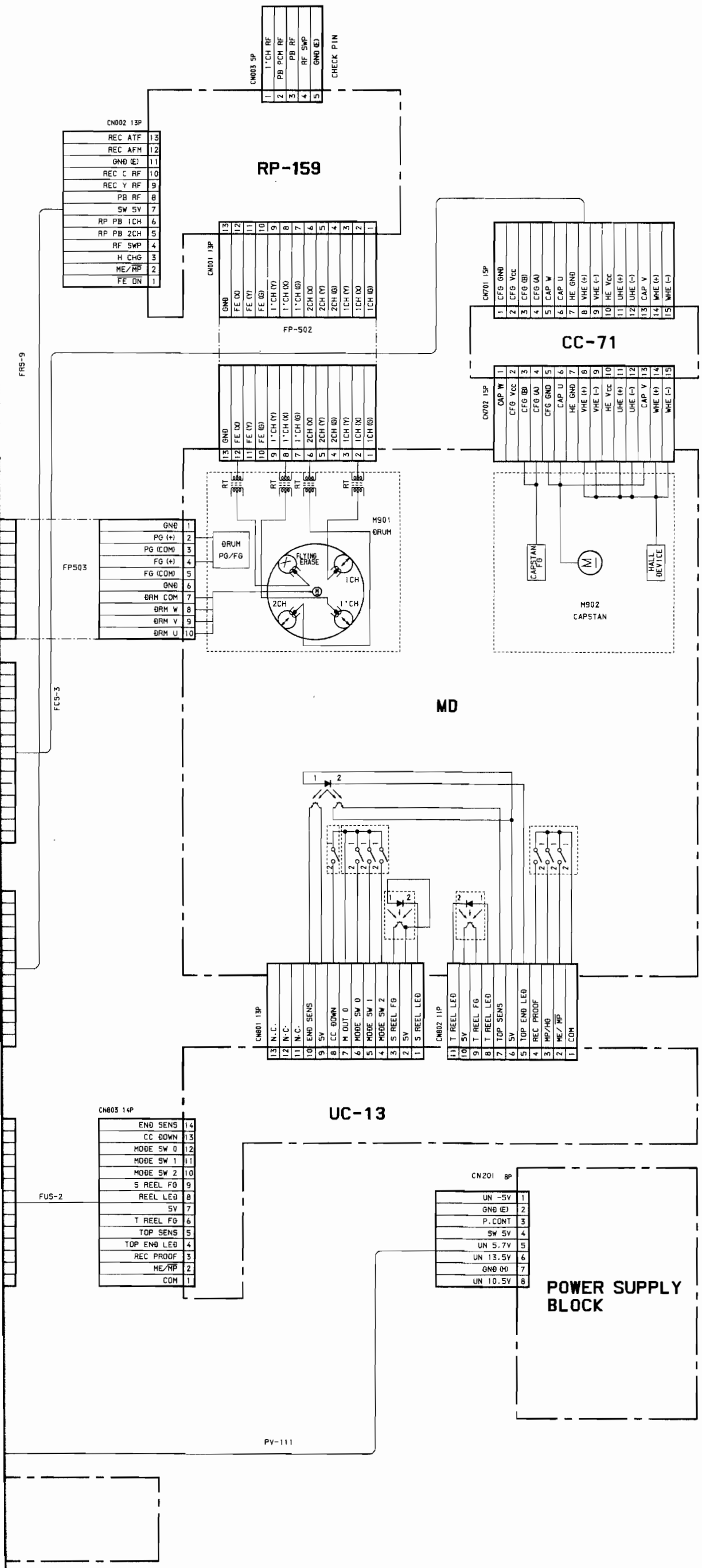
CN003 5P
1 1'CH RF
2 PB PCM RF
3 PB RF
4 RF SWP
5 GND (E)
CHECK PIN
CN002 13P
REC ATF 13
REC AFM 12
GND (E) 11
REC C RF 10
REC Y RF 9
PB RF 8
SW 5V 7
RP PB 1CH 6
RP PB 2CH 5
RF SWP 4
H CHG 3
ME/MP 2
FE ON 1
RP-159
CN001 13P
GND 13
FE (X) 12
FE (Y) 11
FE (G) 10
1'CH (Y) 9
1'CH (X) 8
1'CH (G) 7
2CH (X) 6
2CH (Y) 5
2CH (G) 4
1CH (Y) 3
1CH (X) 2
1CH (G) 1
FP-502
CN701 15P
1 CFG GND
2 CFG Vcc
3 CFG (B)
4 CFG (A)
5 CAP W
6 CAP U
7 HE GND
8 VHE (+)
9 VHE (-)
10 HE Vcc
11 UHE (+)
12 UHE (-)
13 CAP V
14 WHE (+)
15 WHE (-)
CC-71
CN702 15P
CAP W 1
CFG Vcc 2
CFG (B) 3
CFG (A) 4
CFG GND 5
CAP U 6
HE GND 7
VHE (+) 8
VHE (-) 9
HE Vcc 10
UHE (+) 11
UHE (-) 12
CAP V 13
WHE (+) 14
WHE (-) 15
FRS-9
RT
M901
DRUM
FP503
GND 1
PG (+) 2
PG (COM) 3
FG (+) 4
FG (COM) 5
GND 6
DRM COM 7
DRM W 8
DRM V 9
DRM U 10
DRUM PG/FG
FLYING ERASE
1CH
2CH
1'CH
CAPSTAN FG
HALL DEVICE
M902
CAPSTAN
MD
FC9-3
CN801 13P
N.C. 13
N.C. 12
N.C. 11
END SENS 10
5V 9
CC DOWN 8
M OUT 0 7
MODE SW 0 6
MODE SW 1 5
MODE SW 2 4
S REEL FG 3
5V 2
S REEL LED 1
CN802 11P
T REEL LED 11
5V 10
T REEL FG 9
T REEL LED 8
TOP SENS 7
5V 6
TOP END LED 5
REC PROOF 4
MP/HD 3
ME/MP 2
COM 1
UC-13
CN803 14P
END SENS 14
CC DOWN 13
MODE SW 0 12
MODE SW 1 11
MODE SW 2 10
S REEL FG 9
REEL LED 8
5V 7
T REEL FG 6
TOP SENS 5
TOP END LED 4
REC PROOF 3
ME/MP 2
COM 1
FUS-2
CN201 8P
UN -5V 1
GND (E) 2
P.CONT 3
SW 5V 4
UN 5.7V 5
UN 13.5V 6
GND (M) 7
UN 10.5V 8
POWER SUPPLY BLOCK
PV-111

159 (HEAD AMP) SCHEMATIC DIAGRAM

ef. No. RP-159 BOARD : 1000 series—

1 | 2 | 3 | 4 | 5 | 6 | 7 | 8 | 9 | 10 | 11 | 12 | 13 | 14

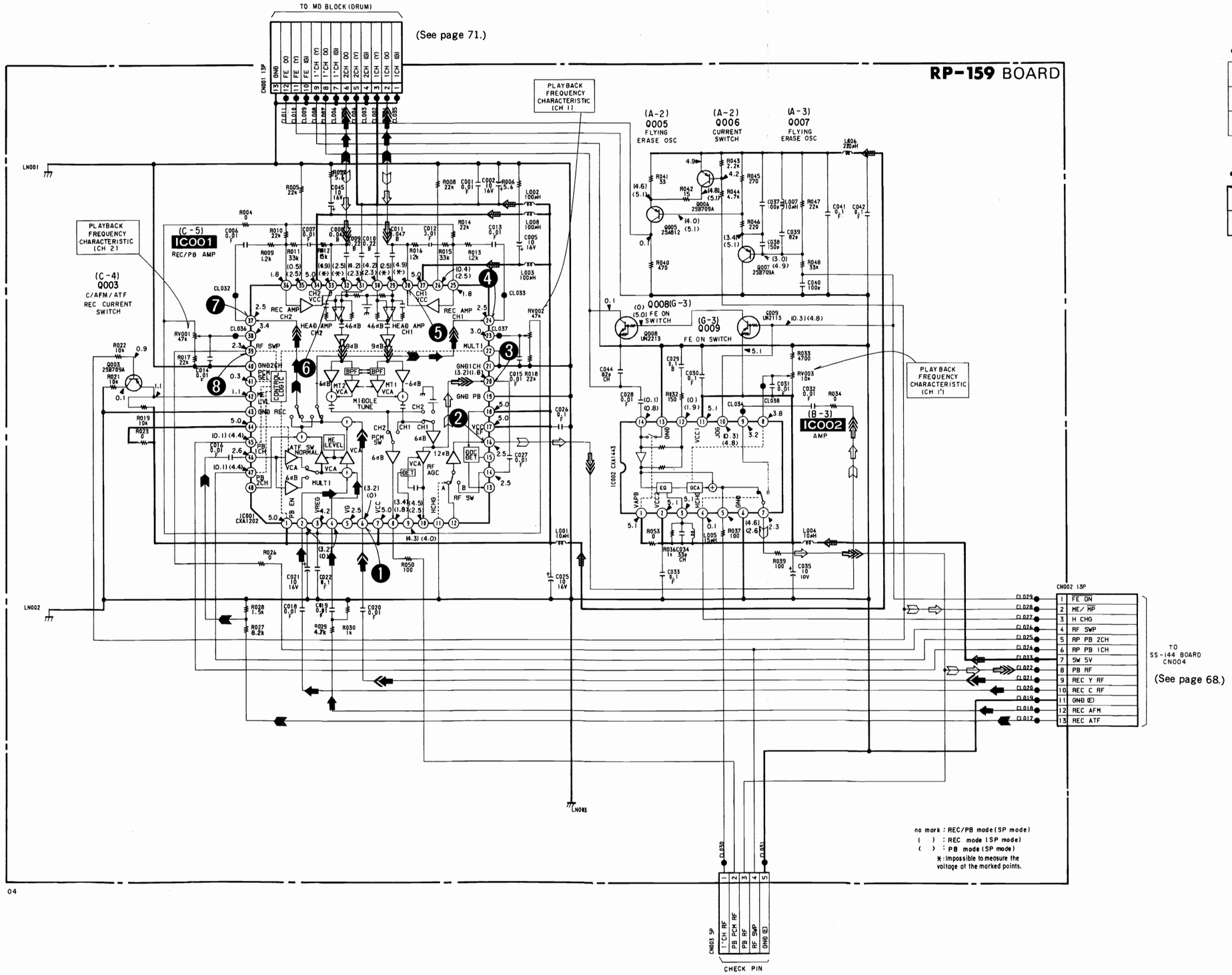

• **Signal path**

	VIDEO Signal			AUDIO Signal
	CHROMA	Y	Y/CHROMA	
REC	➡	➡	➡	➡
PB	⇨	⇨	⇨	⇨

• **Signal path**

	REC	REC/PB	PB
Ref.signal	➡		⇨

5-2. PRINTED WIRING BOARDS AND SCHEMATIC DIAGRAMS

THIS NOTE IS COMMON FOR PRINTED WIRING BOARDS AND SCHEMATIC DIAGRAMS
(In addition to this, the necessary note is printed in each block.)

- **For printed wiring boards.**

- ▒ : Pattern from the side which enables seeing.
- Circled numbers refer to waveforms.

- **For schematic diagram.**

- Caution when replacing chip parts.
  New parts must be attached after removal of chip.
  Be careful not to heat the minus side of tantalum capacitor, because it is damaged by the heat.
- All resistors are in ohms, 1/4W unless otherwise noted.
- Chip resistor are 1/8W or 1/10W unless otherwise noted.
  kΩ: 1000Ω, MΩ: 1000kΩ.
- All capacitors are in μF unless otherwise noted. pF : μμF.
  50V or less are not indicated except for electrolytics and tantalums.
- All variable and adjustable resistors have characteristic curve B, unless otherwise noted.
- : nonflammable resistor.
- : fusible resistor.
- : panel designation.
- △ : internal component.
- : adjustment for repair.
- : B + Line
- : B − Line.
- : IN/OUT direction of (+, −) B line.
- Circled numbers refer to waveforms.
- Voltages are dc between ground and measurement points.
- Readings are taken with a color-bar signal input.
- Readings are taken with a digital multimeter (DC10MΩ).
- Voltage variations may be noted due to normal production tolerances.

Note : The components identified by mark ⚠ or dotted line with mark ⚠ are critical for safety.
Replace only with part number specified.

When indicating parts by reference number, please include the board name.

[SEMICONDUCTOR LOCATION]

In this service manual, the mounted locations of the semiconductors (IC, transistor, diodes) are indicated in red as shown below. This enables to find the location on the board easily when servicing.

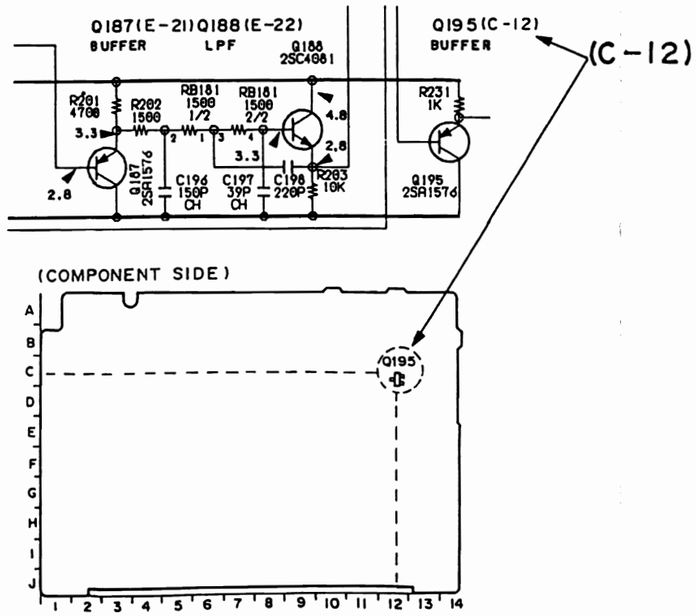

RP-159 (HEAD AMP) SCHEMATIC D
—Ref. No. RP-159 BOARD : 1000 se

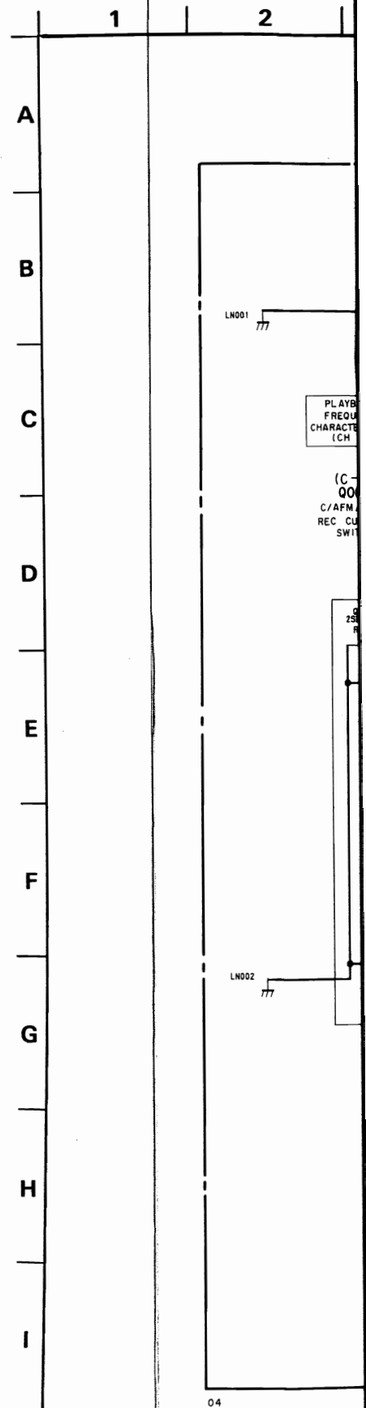

RP-159 (HEAD AMP) PRINTED WIRING BOARD

—Ref. No. RP-159 BOARD : 1000 series—

RP-159 BOARD(COMPONENT SIDE)

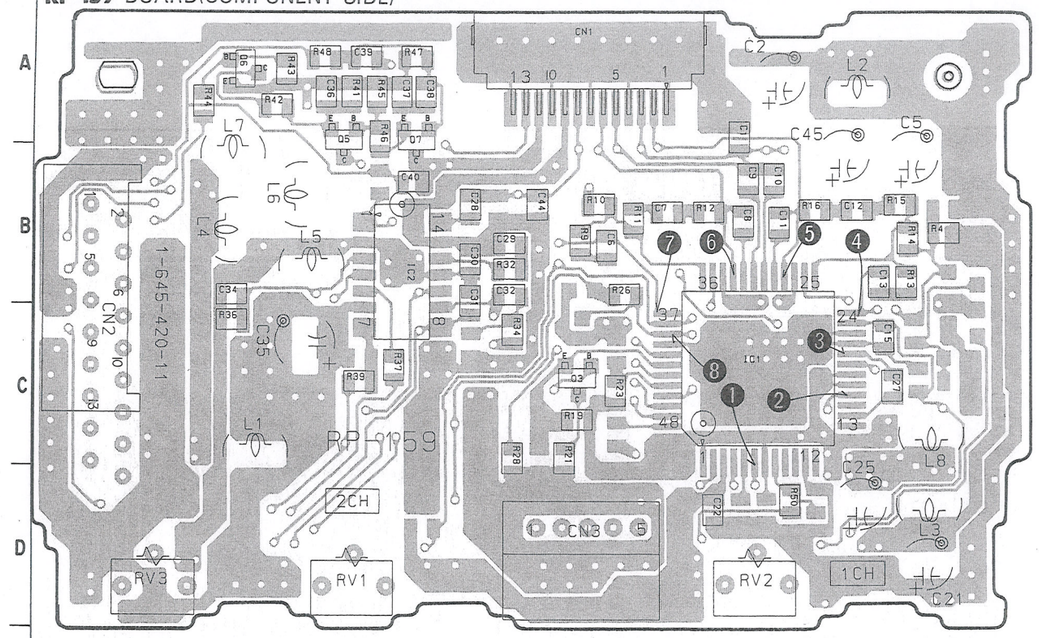

RP-159 BOARD(CONDUCTOR SIDE)

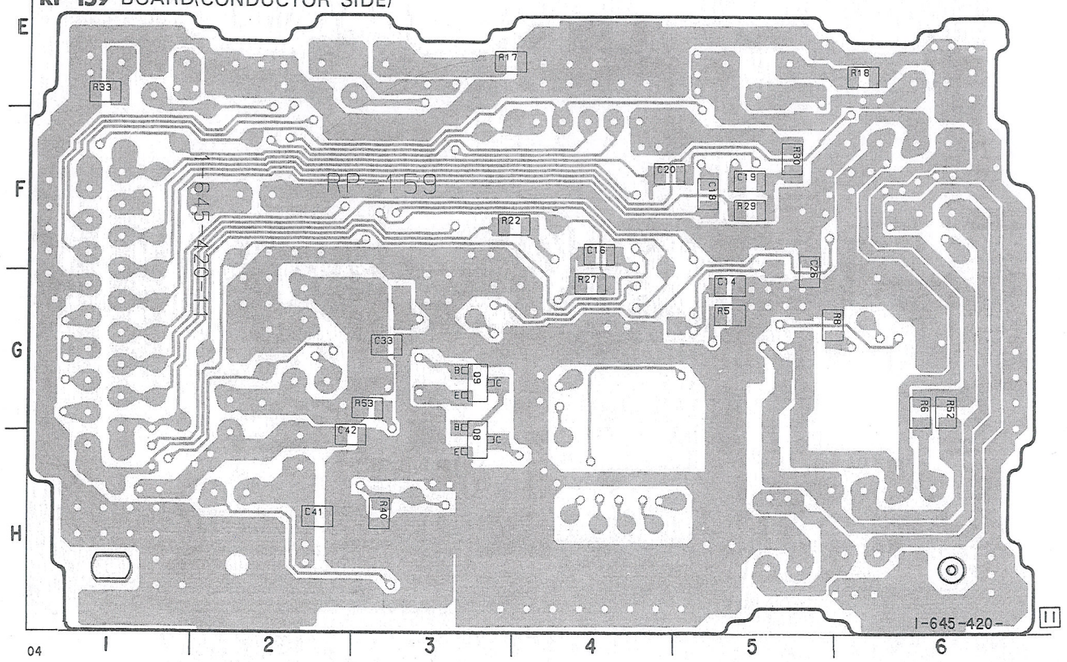

RP-159 BOARD
IC001 C-5
IC002 B-3

Q003 C-4
Q005 A-2
Q006 A-2
Q007 A-3
Q008 G-3
Q009 G-3

< IC >

IC001 8-752-032-35 CXA1202Q-Z
IC002 8-759-062-51 CXA1443M

< TRANSISTOR >

Q003 8-729-422-36 2SB709A-Q
Q005 8-729-216-22 2SA1162-G
Q006 8-729-422-36 2SB709A-Q
Q007 8-729-422-36 2SB709A-Q
Q008 8-729-421-19 UN2213
Q009 8-729-424-18 UN2113

RP-159 BOARD

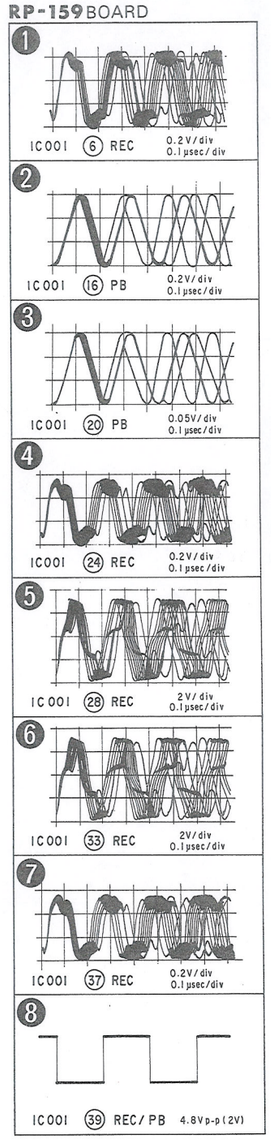

-0 -35 CXA1202Q-Z
-0 -51 CXA1443M

-4 -36 2SB709A-Q
-2 -22 2SA1162-G
-422-36 2SB709A-Q
-422-36 2SB709A-Q
-4 -19 UN2213
-4 -18 UN2113

RP-159 BOARD

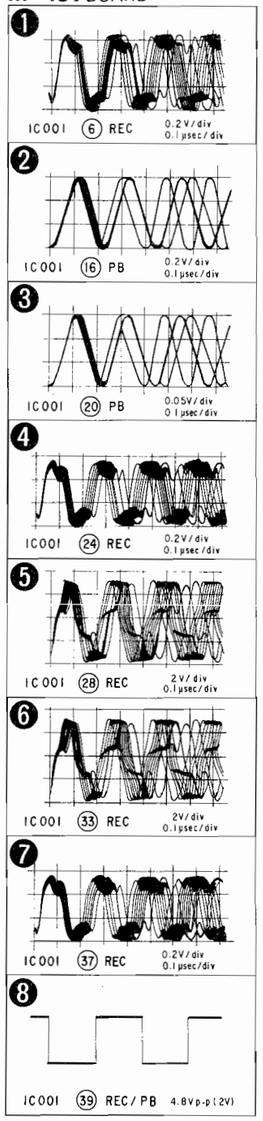

• VI-118 BOABD IC BLOCK DIAGRAMS

IC101 CXA1207AQ

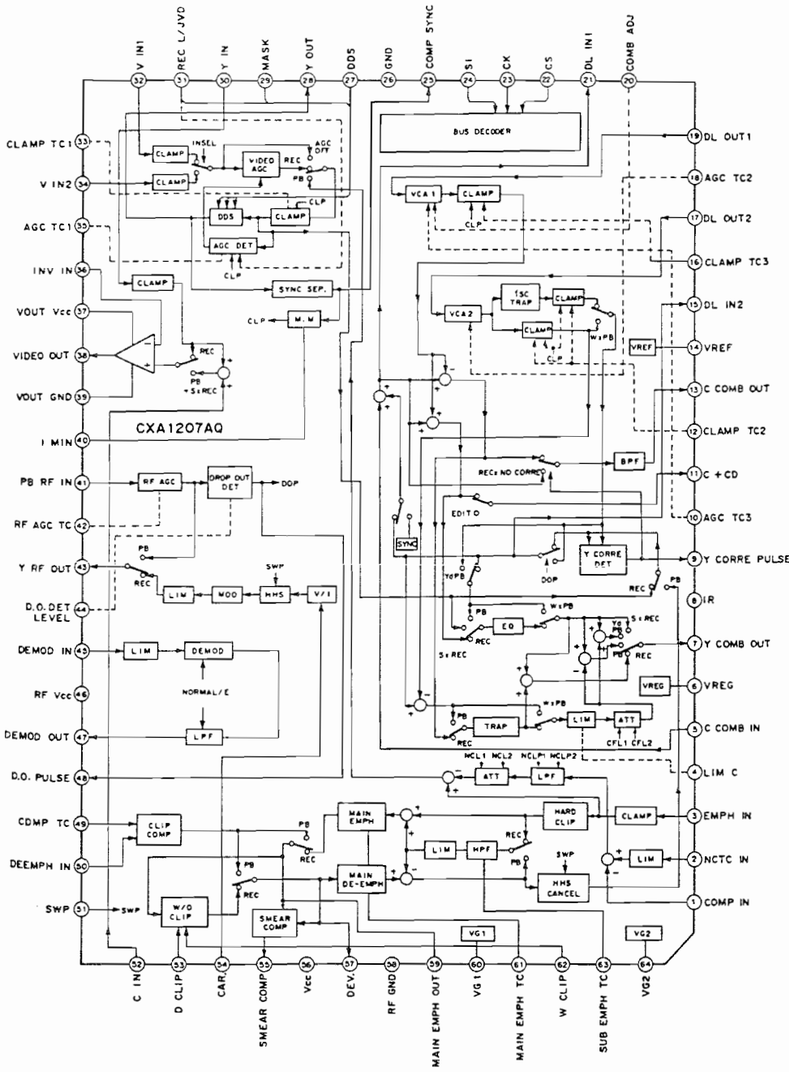

IC103 CXA1208Q

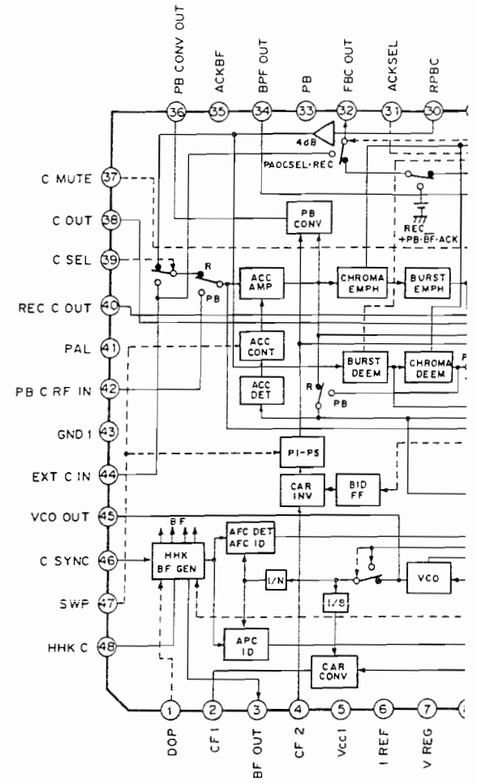

GRAMS

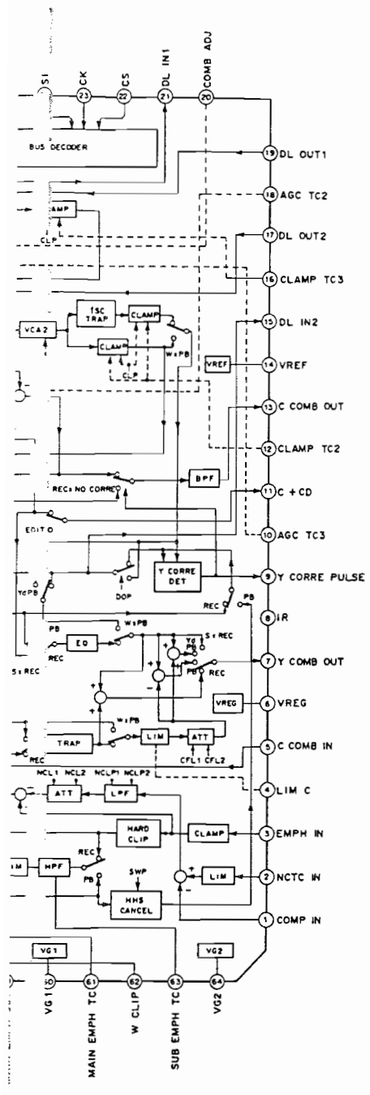

IC103 CXA1208Q

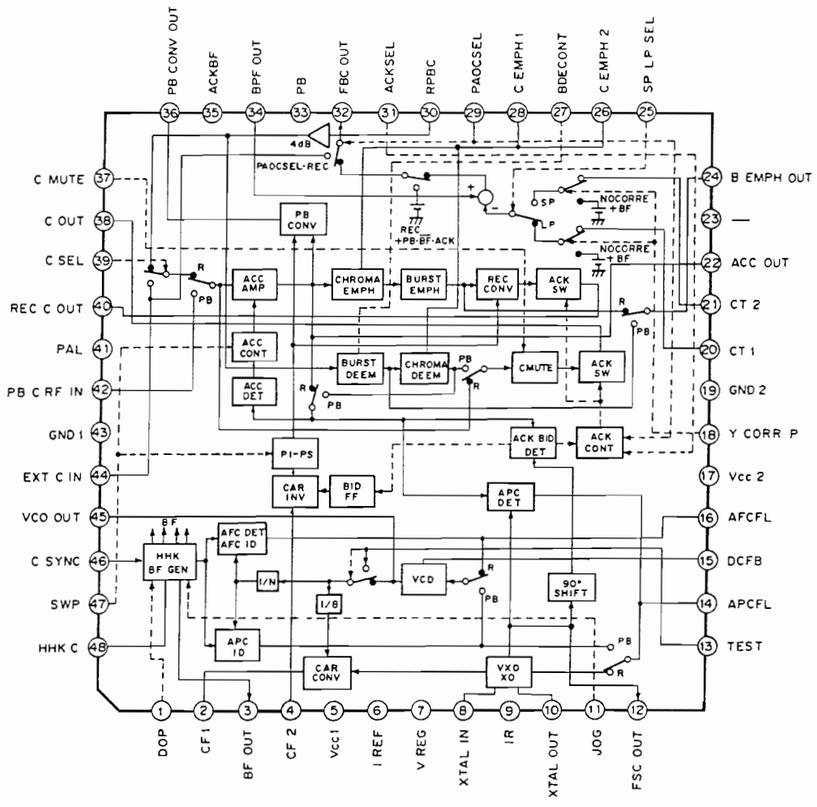

IC401 CXA1203M

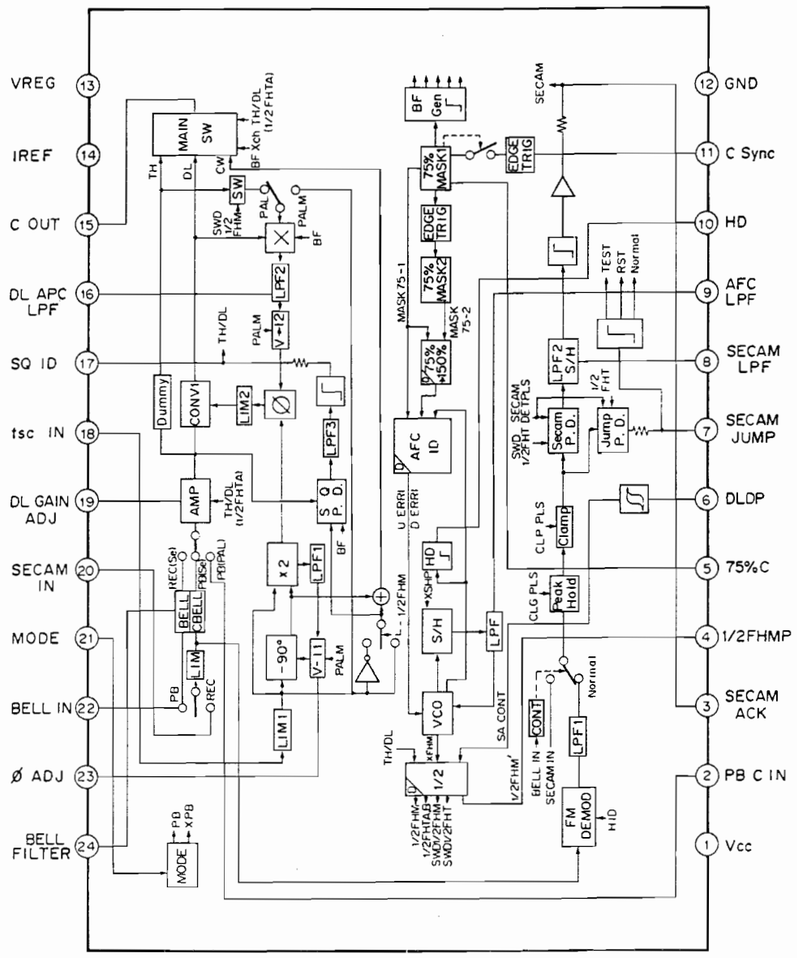

VI-118 BOARD

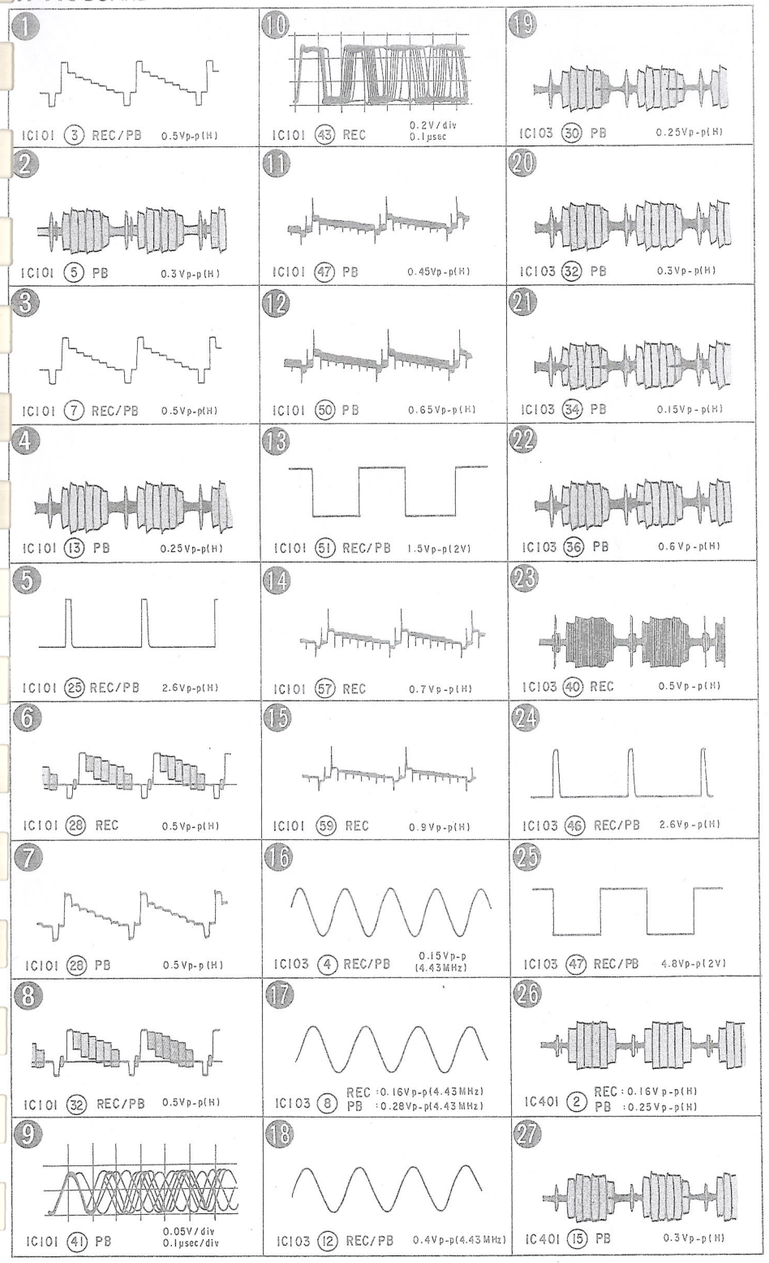

VI-118 (VIDEO PROCESS) PRINTED WIRING BOARD

—Ref.No. VI-118 BOARD : 1000 series—

VI-118 BOARD

D101	F-30	Q101	D-3	Q125	F-3	Q145	F-25	Q406	B-7
D102	G-5	Q102	C-3	Q126	B-4	Q147	H-9	Q407	B-6
D401	C-27	Q104	G-2	Q127	B-4	Q148	H-9	Q408	D-6
D402	C-6	Q105	H-3	Q128	B-3	Q149	G-24	Q409	D-7
D507	I-11	Q106	H-3	Q129	H-28	Q150	E-25	Q410	C-27
		Q112	F-30	Q130	G-5	Q151	B-27	Q509	A-18
IC101	F-27	Q114	G-30	Q132	G-4	Q152	D-10	Q609	I-19
IC102	H-26	Q116	F-4	Q133	D-8	Q156	C-9	Q610	I-19
IC103	C-23	Q118	E-3	Q135	F-5	Q157	B-24	Q611	H-18
IC401	B-26	Q119	E-2	Q140	E-8	Q158	B-24	Q701	E-18
IC701	F-19	Q120	E-31	Q141	E-24	Q159	E-30	Q703	F-19
		Q121	E-30	Q142	F-24	Q401	G-25	Q704	F-14
		Q123	C-29	Q143	F-9	Q402	F-8	Q705	F-19
		Q124	C-28	Q144	F-25	Q405	C-27	Q706	F-18

VI-118 BOARD(CONDUCTOR SIDE)

VI-118 BOARD

D101	F-30	Q101	D-3	Q125	F-3	Q145	F-25	Q406	B-7
D102	G-5	Q102	C-3	Q126	B-4	Q147	H-9	Q407	B-6
D401	C-27	Q104	G-2	Q127	B-4	Q148	H-9	Q408	D-6
D402	C-6	Q105	H-3	Q128	B-3	Q149	G-24	Q409	D-7
D507	I-11	Q108	H-3	Q129	H-28	Q150	E-25	Q410	C-27
		Q112	F-30	Q130	G-5	Q151	B-27	Q509	A-18
IC101	F-27	Q114	G-30	Q132	G-4	Q152	D-10	Q609	I-19
IC102	H-26	Q116	F-4	Q133	D-8	Q156	C-9	Q610	I-19
IC103	C-23	Q118	E-3	Q135	F-5	Q157	B-24	Q611	H-18
IC401	B-26	Q119	E-2	Q140	E-8	Q158	B-24	Q701	E-18
IC701	F-19	Q120	E-31	Q141	E-24	Q159	E-30	Q703	F-19
		Q121	E-30	Q142	F-24	Q401	G-25	Q704	F-14
		Q123	C-29	Q143	F-9	Q402	F-8	Q705	F-19
		Q124	C-28	Q144	F-25	Q405	C-27	Q706	F-18

VI-118 BOARD(CONDUCTOR SIDE)

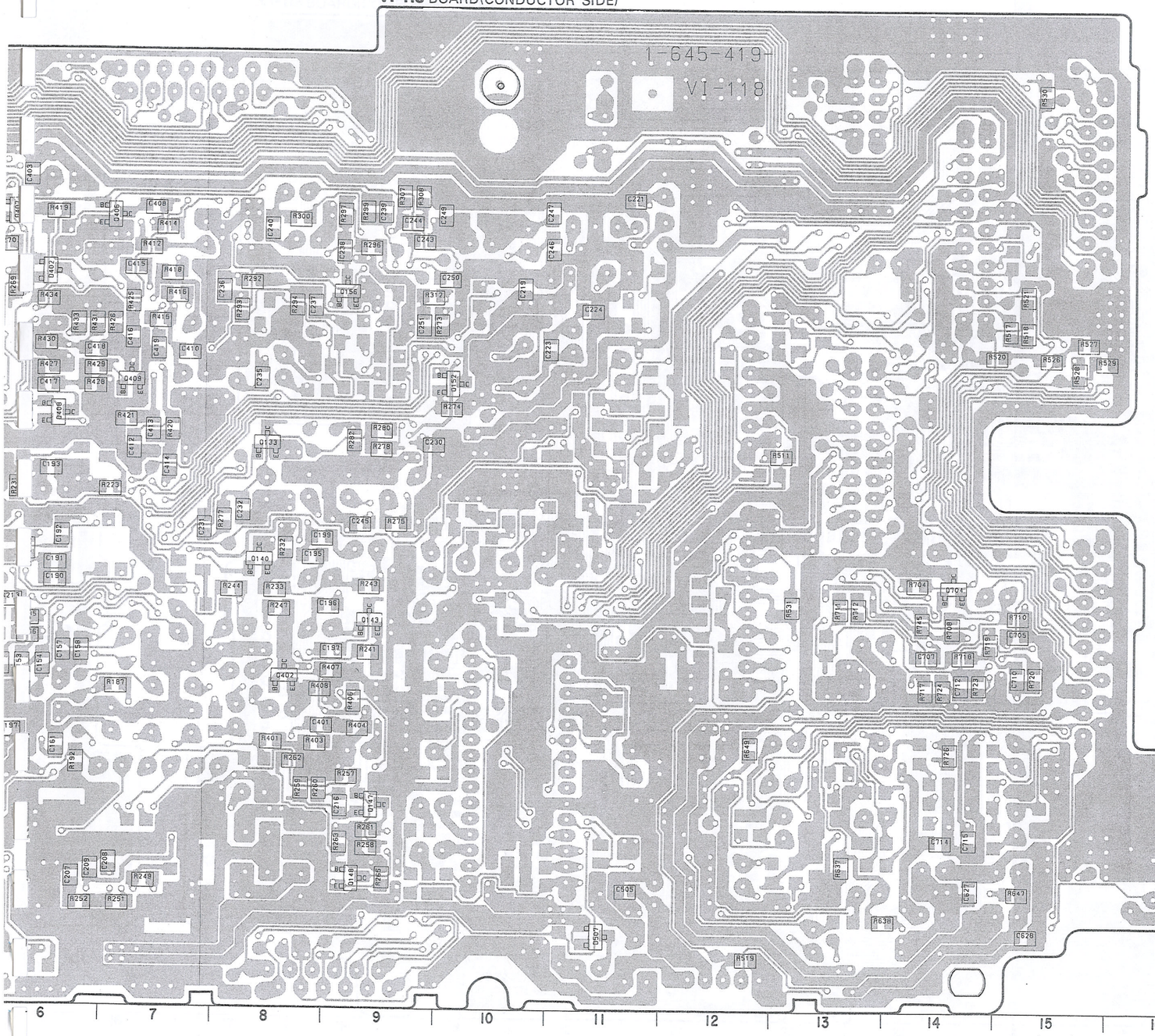

VI-118 BOARD(COMPONENT SIDE)

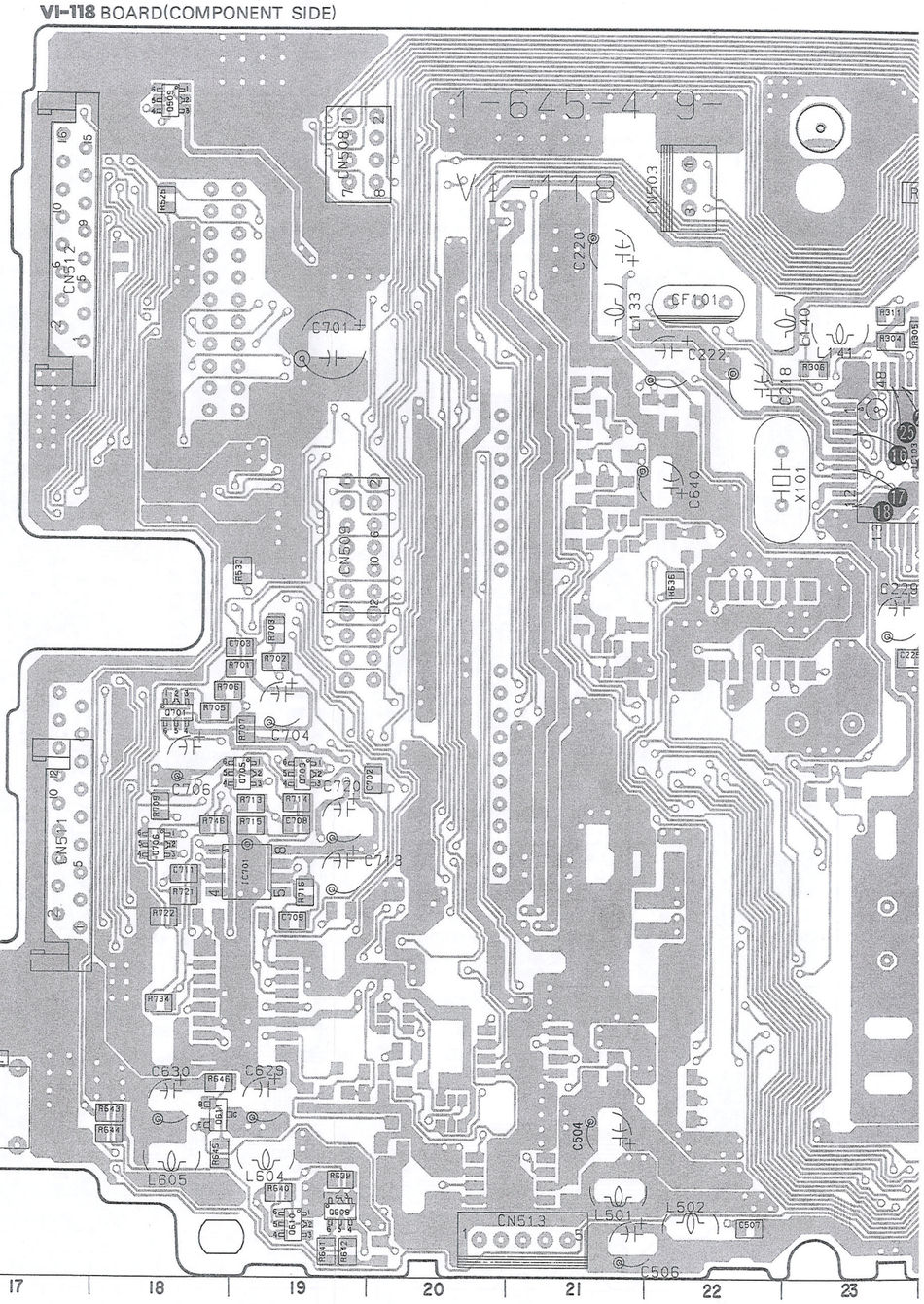

6 7 8 9 10 11 12 13 14 15 16 17 18 19 20 21 22 23

• **Signal path**

	VIDEO Signal			AUDIO Signal
	CHROMA	Y	Y/CHROMA	
REC	➡	➡	➡	➡
PB	⇨	⇨	⇨	⇨

• **Signal path**

	REC	REC/PB	PB
Ref.signal	▶	▷	▷

Note : The components identified by mark ⚠ or dotted line with mark ⚠ are critical for safety.
Replace only with part number specified.

(See page 86.)

TO AU 123 BOARD CN902

CN508 8P: FSC 00, FSC 01, REC AFM, GND (E), PB RF, RF SWP, X2 PB, AFM MODE DET

(See page 86.)

TO AU 123 BOARD CN901

CN509 12P: AUDIO MUTE, INS L, AUDIO PB, GND (A), LINE OUT L, SW 5V/ LP, SW 5V, LINE OUT R, SW 9V, INS R, AFM OUTSEL, AFM MODE

(SW_5V)

R511 0

R531 0

(UN_5.7V)

(E-18) Q701 BUFFER

(F-19) Q705 SWITCH

(F-19) Q703 BUFFER

IC701 AMP

+VCC

-VCC

(UN_-5V)

C640 2.2 6.3V

R636 0

(UN_10.5V)

Q704(F-14) MUTE

Q706 SWITCH (F-18)

(I-19) Q609 BUFFER

(I-19) Q610 BUFFER

(UN -5V)

Q611(H-18) BUFFER

R726 0

R734 0

R649 0

R525 0

R5

R4

R7

R6

R3

R2

R1

CN513 5P: VTR/ TV (BST 5V), SW 5V, RFU AUDIO, RFU VIDEO, GND (E)

VTR/TV (BST 5V) 5
SW 5V 4
RFU AUDIO 3
RFU VIDEO 2
GND (E) 1

RF MODULATOR RFU-2027

IN AERIAL

OUT

CN511 12P: LINE OUT V, GND (E), LINE (A) IN V, GND (E), LINE OUT L, GND (A), LINE (A) IN L, GND (E), LINE OUT R, GND (A), LINE (A) IN R, GND (E)

TO RJ-37 BOARD CN101

(See page 89.)

S501 GL

CN512 16P: SIRCS OUT JACK, M/S SW, REMOCON MODE, SIRCS IN JACK, LANC JACK, LANC VBB, GND (A), AV IN L, AV IN R, GND (A), AV OUT L, AV OUT R, AV AV CONT, AV OUT V, GND (E), AV IN V

TO RJ-37 BOARD CN102

(See page 89.)

(A-18) 0509 SWITCH

CN502 13P: RF SWP, AFM MODE DET, AUDIO MUTE, AFM OUTSEL, AFM MODE, PB RF, REC Y RF, REC C RF, GND (E), REC AFM, MONO, AUDIO PB, SP/LP DET

TO SS-144 BOARD CN002

(See page 68.)

no mark : REC/PB mode (SP mode)
( ) : REC mode (SP mode)
( ) : PB mode (SP mode)
* : Impossible to measure the voltage at the marked points.

Q703 8-729-421-90 XN4113
Q704 8-729-902-XX UN2215
Q705 8-729-422-54 XN4215
Q706 8-729-422-54 XN4215

• Refer to page 54 to 57 for IC block diagrams of IC101, IC102 and IC401 on VI-118 board.

12 13 14 15 16 17 18 19 20 21 22 23

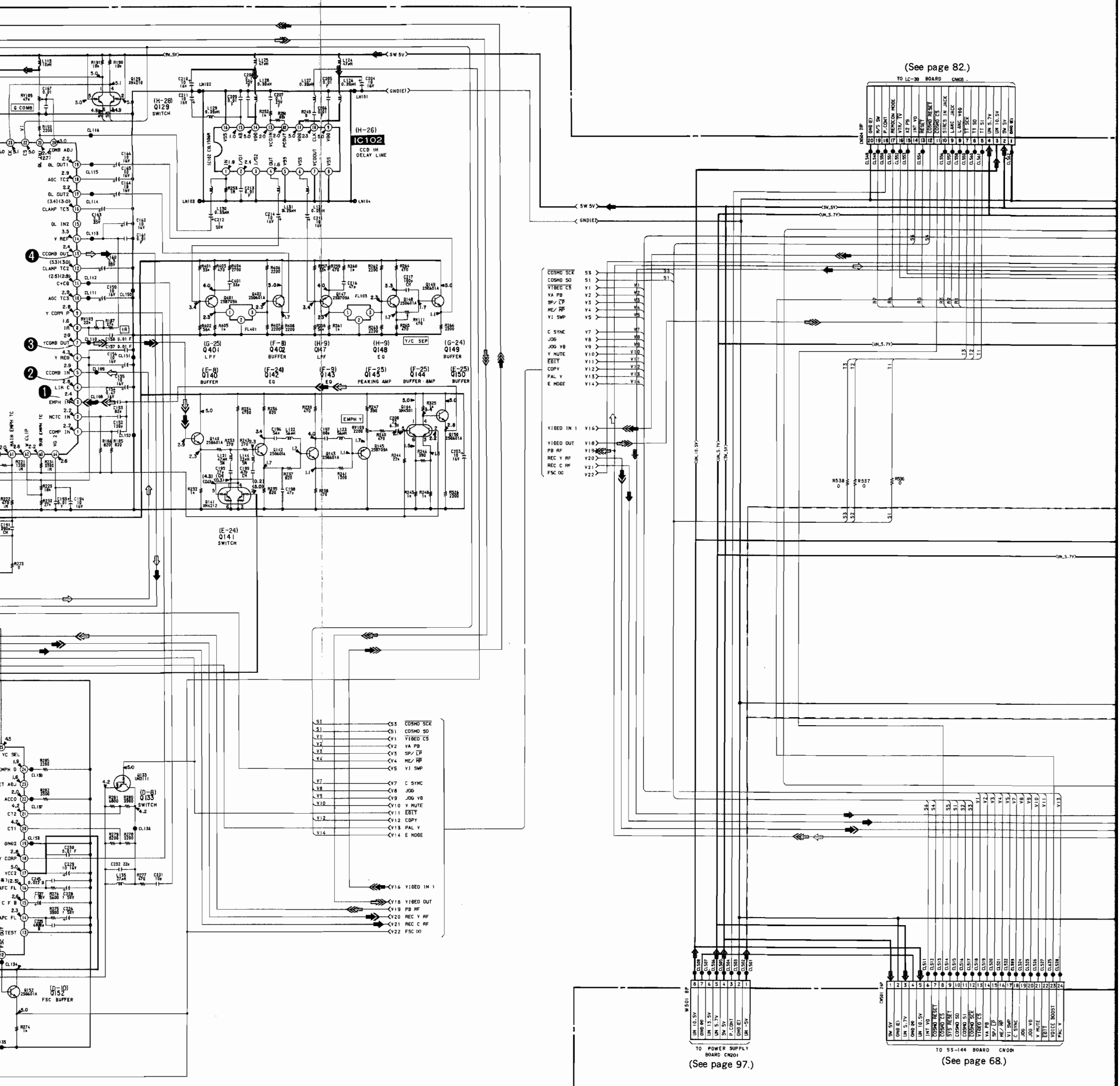

< DIODE >

D101	8-719-800-76	1SS226
D102	8-719-400-18	MA152WK
D401	8-719-400-18	MA152WK
D402	8-719-400-18	MA152WK
D507	8-719-400-18	MA152WK

< IC >

IC101	8-752-054-87	CXA1207AQ
IC102	8-752-333-24	CXL1506M
IC103	8-752-039-34	CXA1208Q
IC401	8-752-031-49	CXA1203M
IC701	8-759-100-96	uPC4558G2

< TRANSISTOR >

Q101	8-729-101-07	2SB798-DL
Q102	8-729-421-19	UN2213
Q104	8-729-422-27	2SD601A-Q
Q105	8-729-422-27	2SD601A-Q
Q112	8-729-102-07	2SC2223-F13
Q114	8-729-422-27	2SD601A-Q
Q116	8-729-424-18	UN2113
Q118	8-729-422-27	2SD601A-Q
Q119	8-729-422-27	2SD601A-Q
Q120	8-729-403-02	XN4212
Q121	8-729-402-84	XN4601
Q123	8-729-422-27	2SD601A-Q
Q124	8-729-422-36	2SB709A-Q
Q125	8-729-422-36	2SB709A-Q
Q126	8-729-422-27	2SD601A-Q
Q127	8-729-422-27	2SD601A-Q
Q128	8-729-422-27	2SD601A-Q
Q129	8-729-403-24	XN4210
Q130	8-729-422-36	2SB709A-Q
Q132	8-729-421-19	UN2213
Q133	8-729-424-08	UN2111
Q135	8-729-421-19	UN2213
Q140	8-729-422-27	2SD601A-Q
Q141	8-729-403-02	XN4212
Q142	8-729-422-27	2SD601A-Q
Q143	8-729-422-27	2SD601A-Q
Q144	8-729-402-81	XN4501
Q145	8-729-422-36	2SB709A-Q
Q147	8-729-422-36	2SB709A-Q
Q148	8-729-422-27	2SD601A-Q
Q149	8-729-422-27	2SD601A-Q
Q150	8-729-422-27	2SD601A-Q
Q151	8-729-420-12	XN4213
Q152	8-729-422-27	2SD601A-Q
Q156	8-729-421-19	UN2213
Q157	8-729-422-36	2SB709A-Q
Q158	8-729-422-27	2SD601A-Q
Q159	8-729-424-08	UN2111
Q401	8-729-422-36	2SB709A-Q
Q402	8-729-422-27	2SD601A-Q
Q405	8-729-420-20	XN4312
Q406	8-729-421-19	UN2213
Q407	8-729-424-18	UN2113
Q408	8-729-421-19	UN2213
Q409	8-729-422-27	2SD601A-Q
Q410	8-729-402-81	XN4501
Q509	8-729-420-20	XN4312
Q609	8-729-402-84	XN4601
Q610	8-729-402-84	XN4601
Q611	8-729-422-27	2SD601A-Q
Q701	8-729-402-81	XN4501

VI-118 (VIDEO PROCESS) SCHEMATIC DIAGRAM

—Ref.No. VI-118 BOARD : 1000 series—

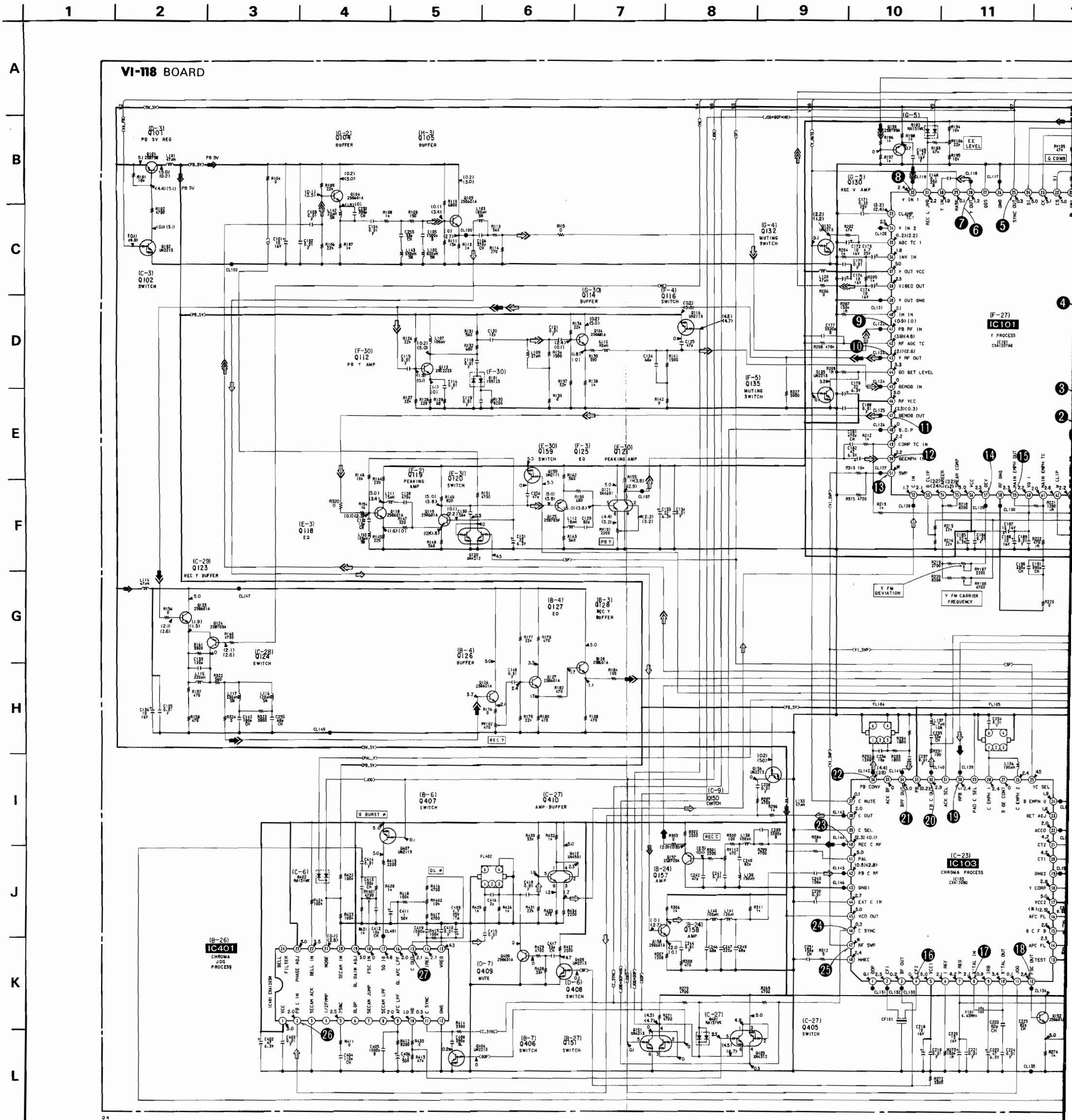

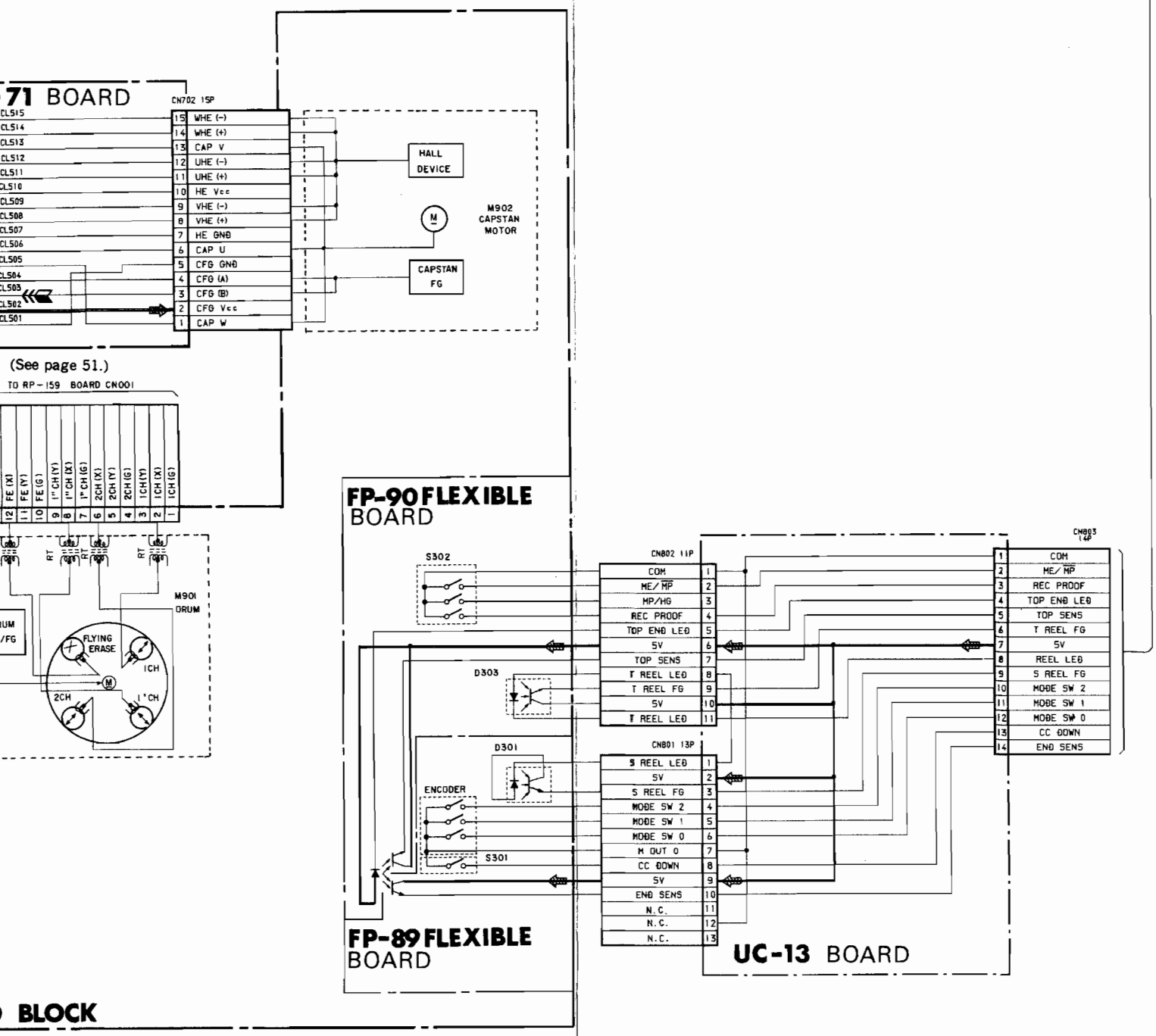

SS-144 BOARD

• Signal path

	VIDEO Signal			AUDIO Signal
	CHROMA	Y	Y/CHROMA	
REC	➡	➡	➡	➡
PB	⇨	⇨	⇨	⇨

• Signal path

	REC	REC/PB	PB
Drum speed servo		▷	
Drum phase servo		▷	
Drum servo(speed and phase)		▷	
Capstan speed servo		▷	
Capstan phase servo	▶	▷	▷
Capstan servo(speed and phase)		▷	
Ref.signal	▶	▷	▷

Note : The components identified by mark ⚠ or dotted line with mark ⚠ are critical for safety.
Replace only with part number specified.

SS-144 (SERVO/SYSTEM CONTROL), CC-71 (RELAY), UC-13 (MD RELAY), FP-89, FP-90 (MECHADECK FLEXIBLE) SCHEMATIC DIAGRAM

—Ref.No. SS-144, CC-71, UC-13, FP-89 and FP-90 BOARDS : 2000 series—

SS-144 BOARD (COMPONENT SIDE)

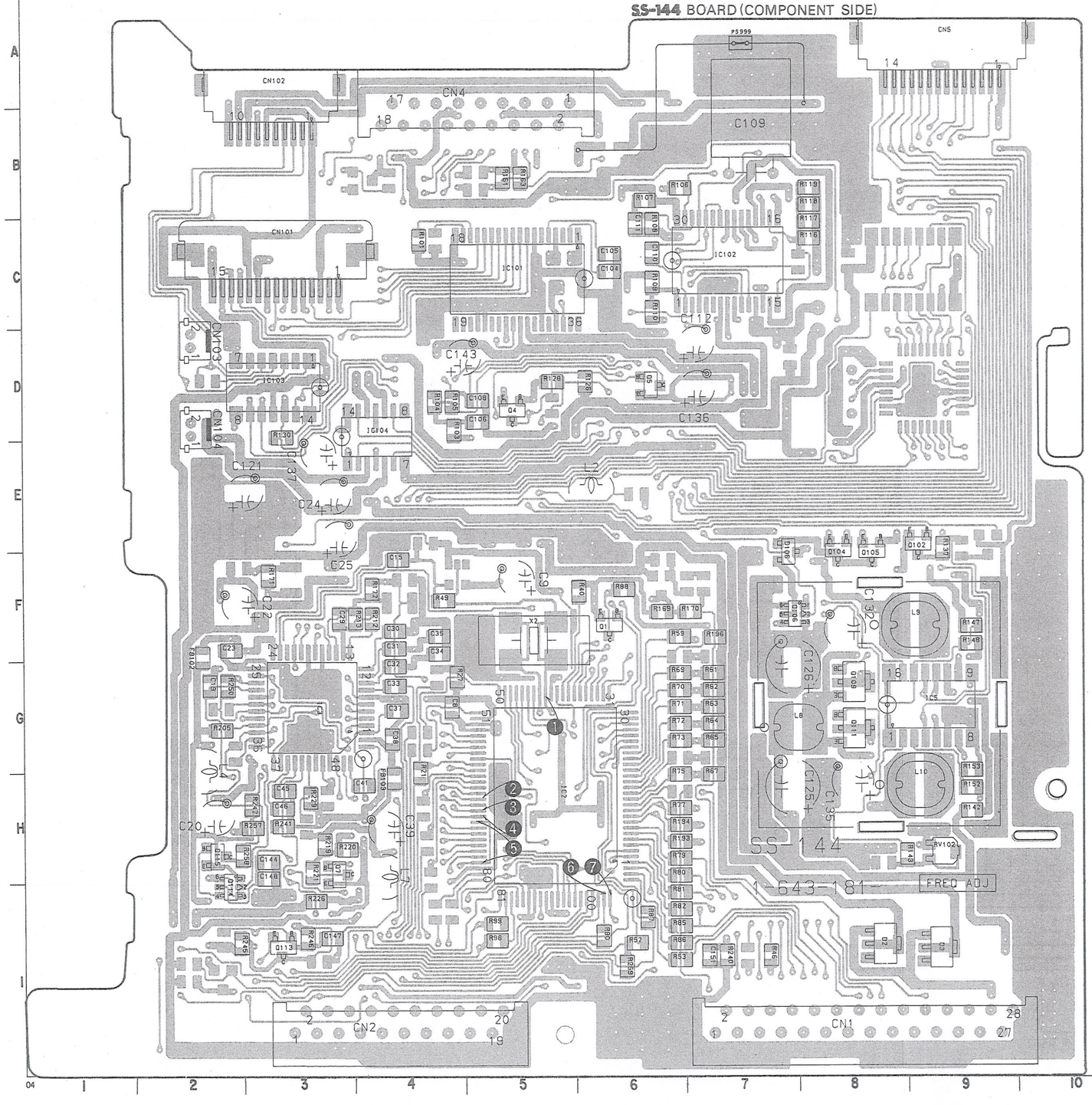

SS-144 BOARD (CONDUCTOR SIDE)

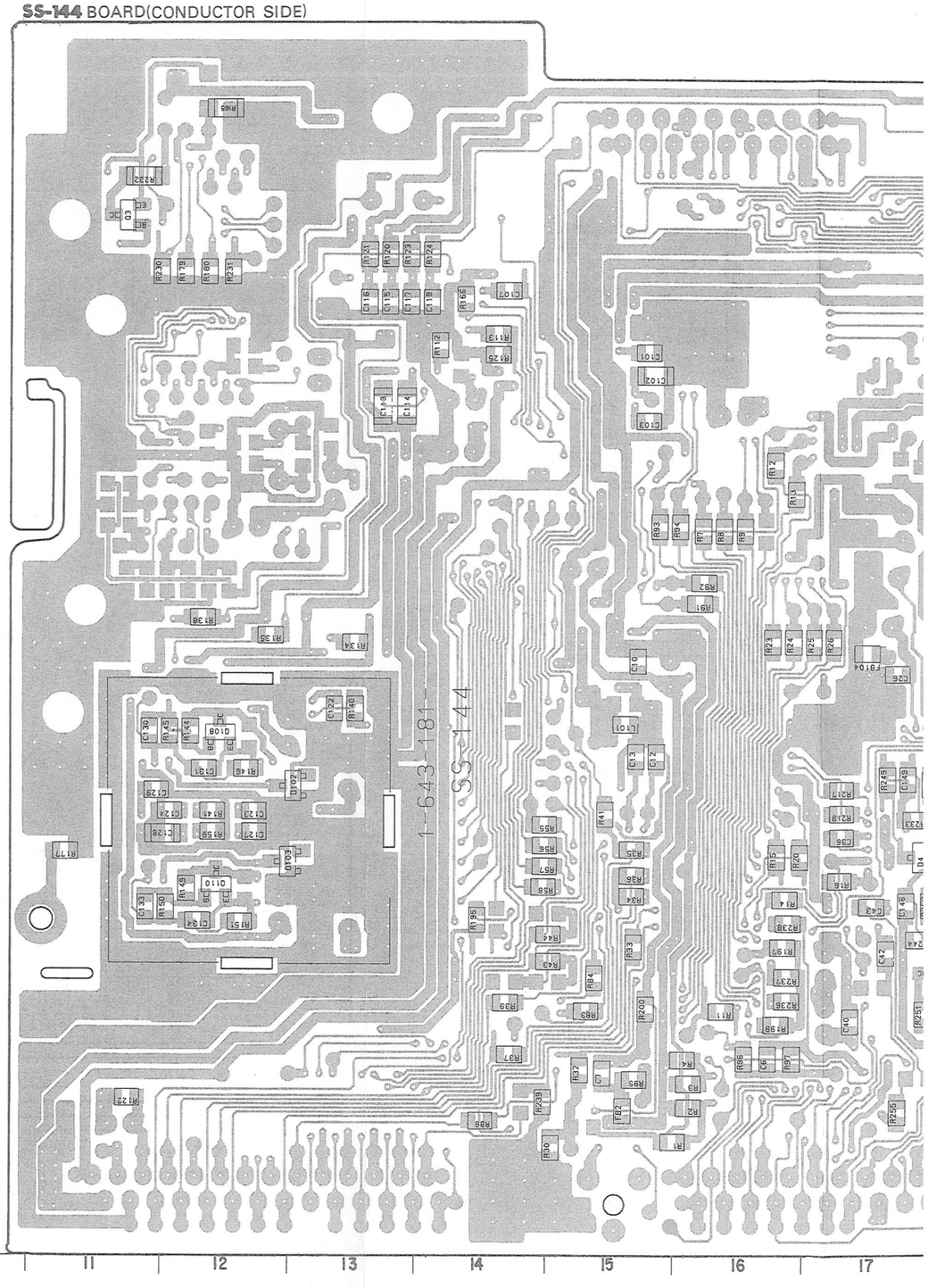

SS-144 BOARD(CONDUCTOR SIDE)

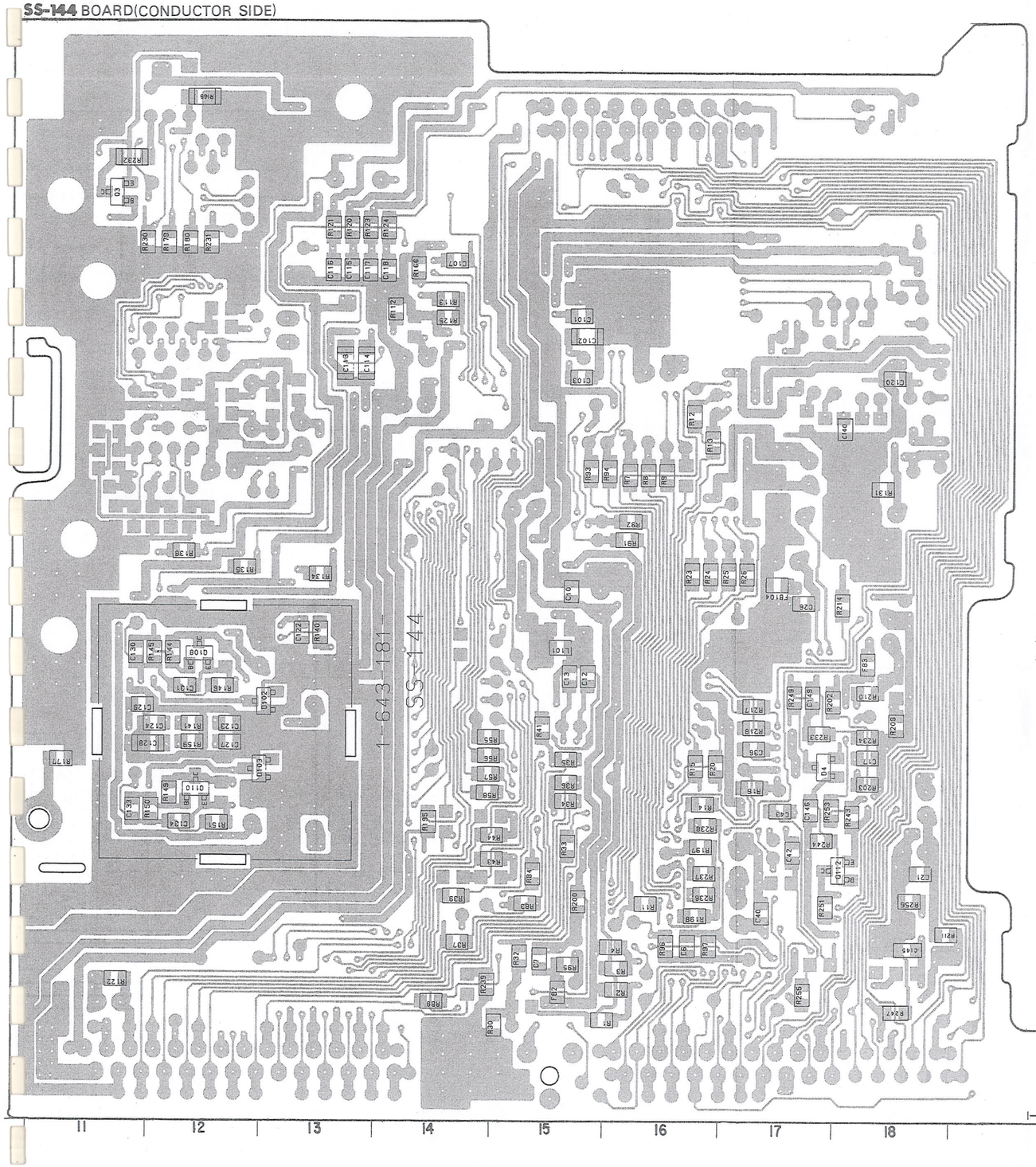

SS-144 BOARD

D002	I-8
D003	I-9
D004	G-18
D102	G-13
D103	G-13
D106	E-8
IC002	H-5
IC003	G-3
IC005	G-9
IC101	C-3
IC102	C-7
IC103	D-3
IC104	D-4
Q001	F-6
Q003	B-12
Q004	D-5
Q005	D-6
Q007	H-3
Q102	E-9
Q104	E-8
Q105	E-8
Q106	F-6
Q108	F-12
Q109	G-8
Q110	G-12
Q111	G-8
Q112	H-18
Q113	I-3
Q114	I-2
Q115	H-2

CC-71 BOARD

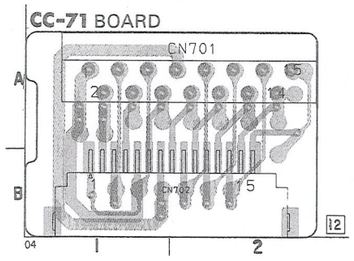

< DIODE >

⚠D002	8-719-200-27	E10DS2
⚠D003	8-719-200-27	E10DS2
D004	8-719-104-34	1S2836
D102	8-719-938-75	SB05-05CP
D103	8-719-938-75	SB05-05CP
D106	8-719-104-34	1S2836

< IC >

IC002	8-752-836-84	CXP80624-415Q
IC003	8-759-070-96	CXA1481AQ
IC005	8-759-945-17	MB3775PF
IC101	8-759-823-65	MCD002AM
IC102	8-759-990-55	CXA8006M
IC103	8-759-148-05	CXA8010M
IC104	8-759-823-94	LB1836M

< TRANSISTOR >

Q001	8-729-901-01	DTC144EK
Q003	8-729-100-66	2SC1623-L6
Q004	8-729-901-01	DTC144EK
Q005	8-729-901-01	DTC144EK
Q007	8-729-901-01	DTC144EK
Q102	8-729-901-06	DTA144EK
Q104	8-729-424-76	UN2210
Q105	8-729-424-76	UN2210
Q106	8-729-420-12	XN4213
Q108	8-729-100-66	2SC1623-L6
⚠Q109	8-729-805-25	2SB1121-S
Q110	8-729-100-66	2SC1623-L6
⚠Q111	8-729-805-25	2SB1121-S
Q112	8-729-422-36	2SB709A-Q
Q113	8-729-100-66	2SC1623-L6
Q114	8-729-402-81	XN4501
Q115	8-729-901-04	DTA114EK

: Pattern of the rear side.

UC-13 BOARD

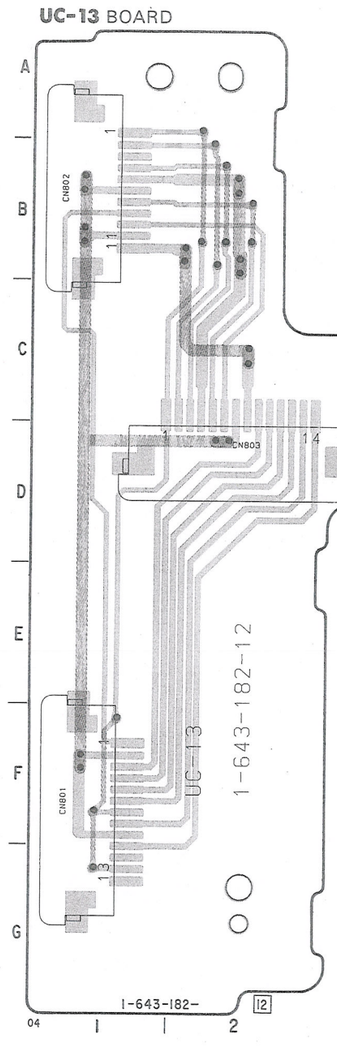

● : Through hole.

< TRANSISTOR >

	E10DS2	
	E10DS2	
-34	1S2836	
-75	SB05-05CP	
	SB05-05CP	
	1S2836	
	CXP80624-415Q	
	CXA1481AQ	
-17	MB3775PF	
-65	MCD002AM	
	CXA8006M	
	CXA8010M	
-94	LB1836M	

Q001	8-729-901-01	DTC144EK
Q003	8-729-100-66	2SC1623-L6
Q004	8-729-901-01	DTC144EK
Q005	8-729-901-01	DTC144EK
Q007	8-729-901-01	DTC144EK
Q102	8-729-901-06	DTA144EK
Q104	8-729-424-76	UN2210
Q105	8-729-424-76	UN2210
Q106	8-729-420-12	XN4213
Q108	8-729-100-66	2SC1623-L6
⚠Q109	8-729-805-25	2SB1121-S
Q110	8-729-100-66	2SC1623-L6
⚠Q111	8-729-805-25	2SB1121-S
Q112	8-729-422-36	2SB709A-Q
Q113	8-729-100-66	2SC1623-L6
Q114	8-729-402-81	XN4501
Q115	8-729-901-04	DTA114EK

: Pattern of the rear side.

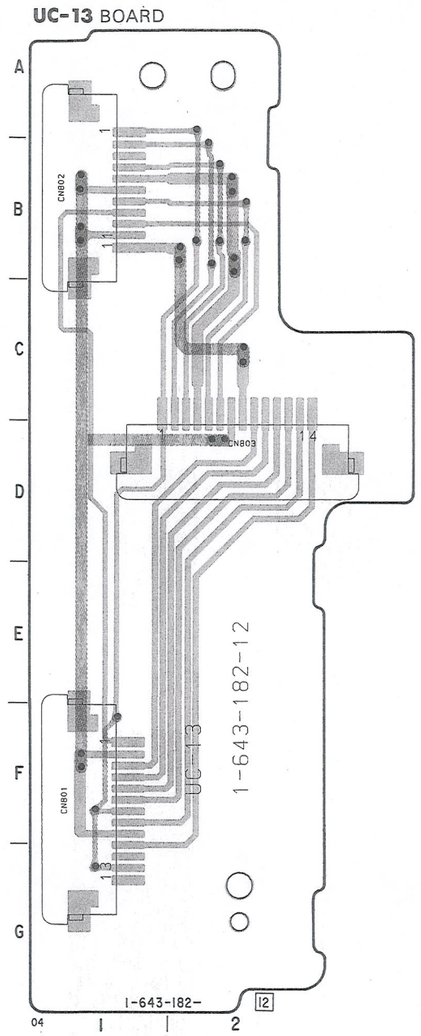

● : Through hole.

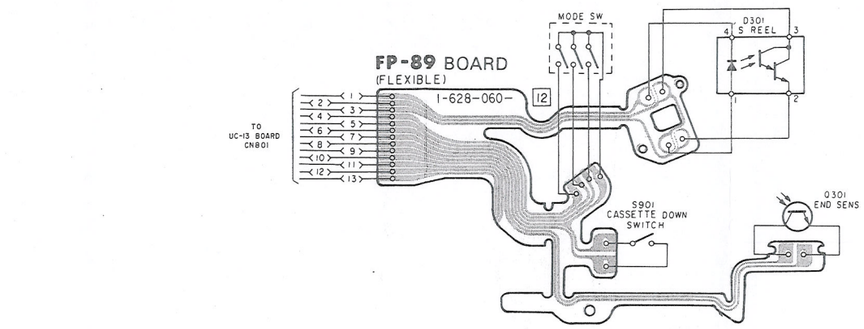

< DIODE >

D301 8-719-820-44 TLP907-0 (SONY2)

< TRANSISTOR >

Q301 8-729-906-48 EE-TP109

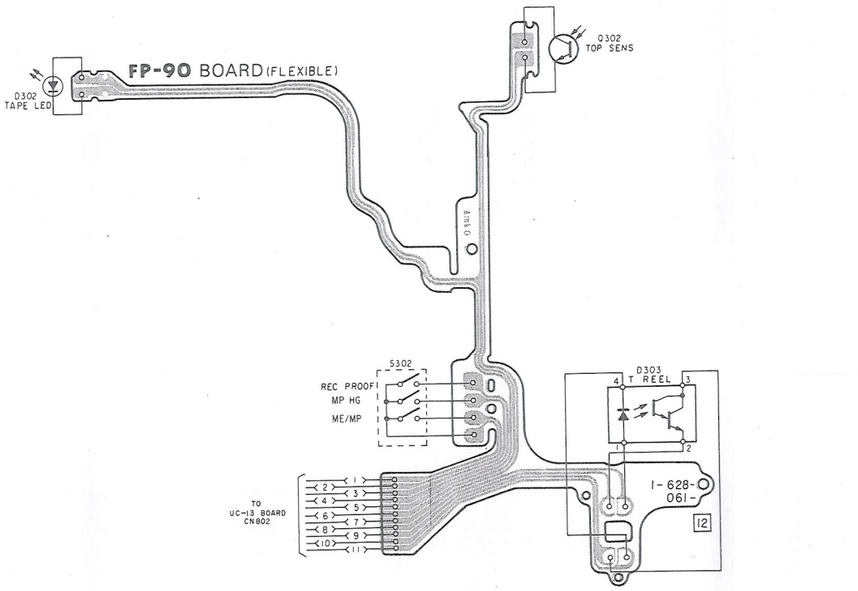

< DIODE >

D302 8-719-026-04 GL-453JS (including LED HOLDER)

D303 8-719-820-41 TLP907-0 (SONY2)

< TRANSISTOR >

Q302 8-729-906-48 EE-TP109

LC-38 (MODE CONTROL) PRINTED WIRING BOARD

—Ref.No.LC-38 BOARD : 3000 series—

LC-38 BOARD(COMPONENT SIDE)

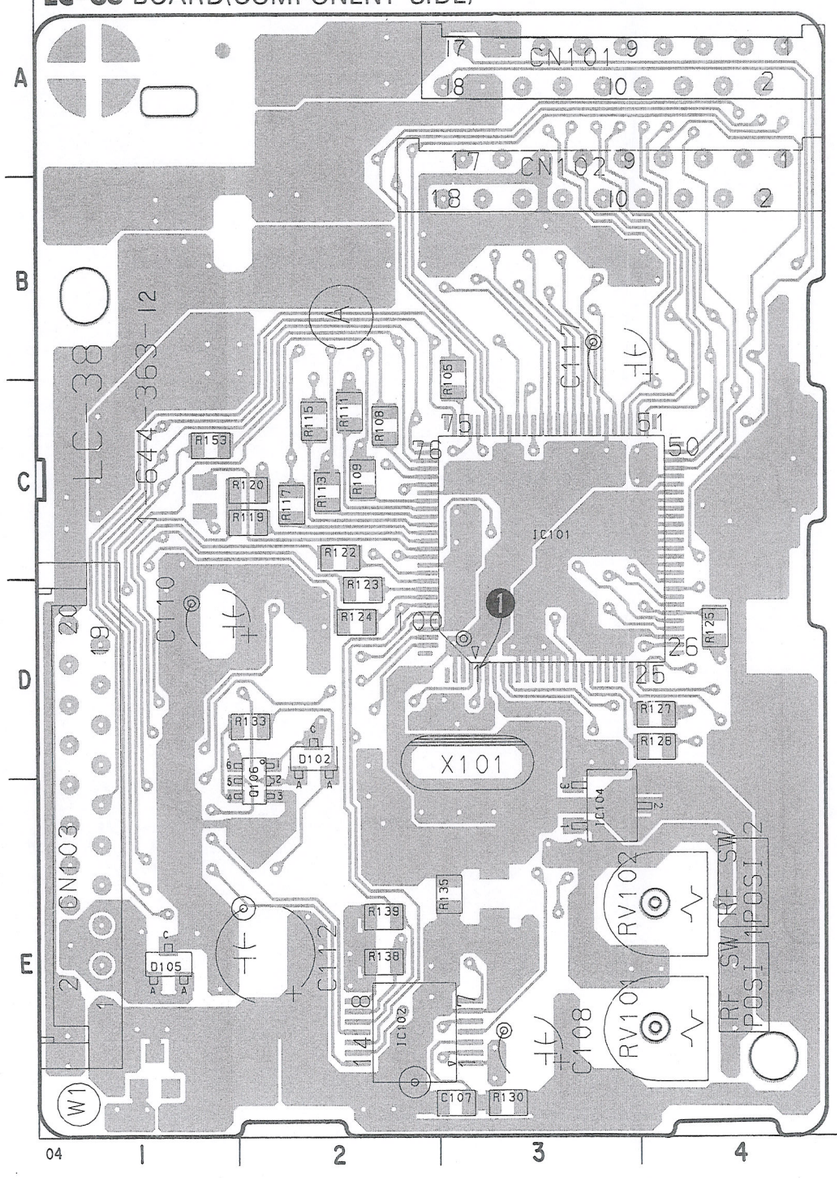

LC-38 BOARD(CONDUCTOR SIDE)

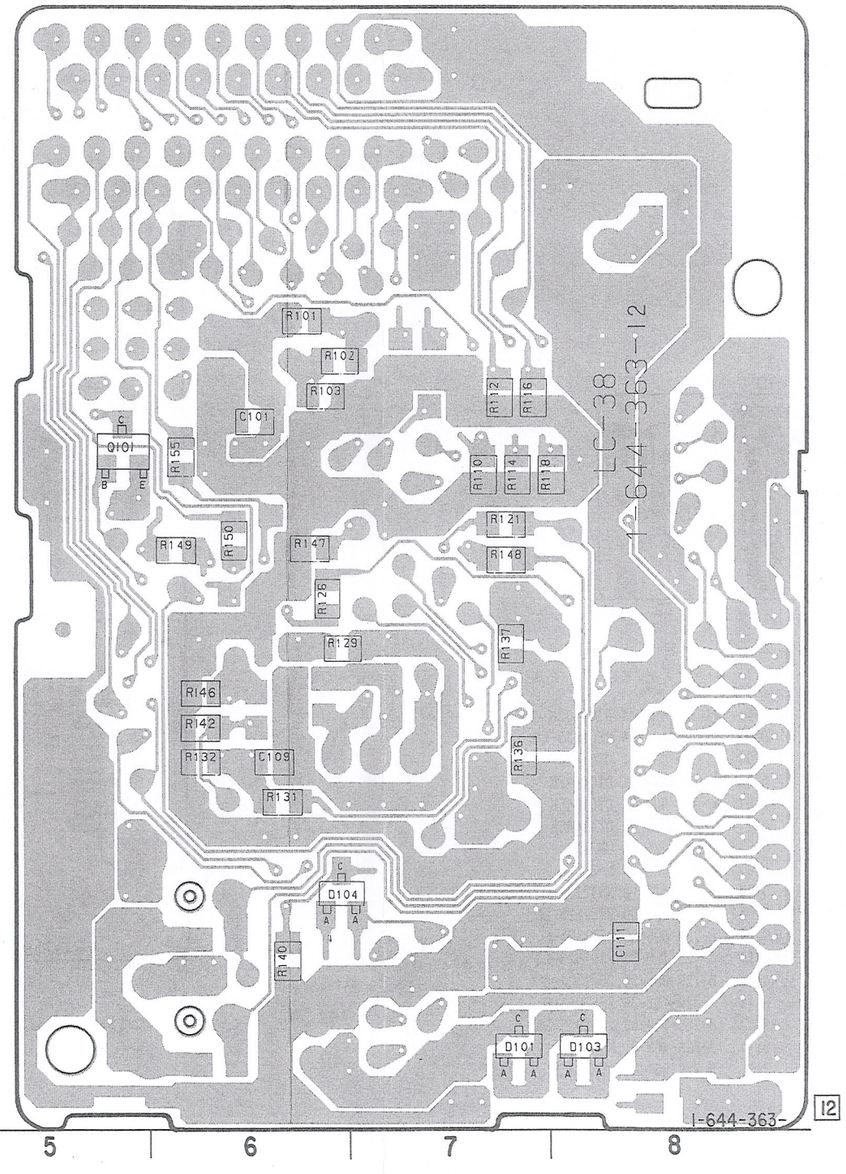

I-644-363-12

LC-38 BC
D101
D102
D103
D104
D105

IC101
IC102
IC104

Q101
Q106

Note :

-38 BOARD(CONDUCTOR SIDE)

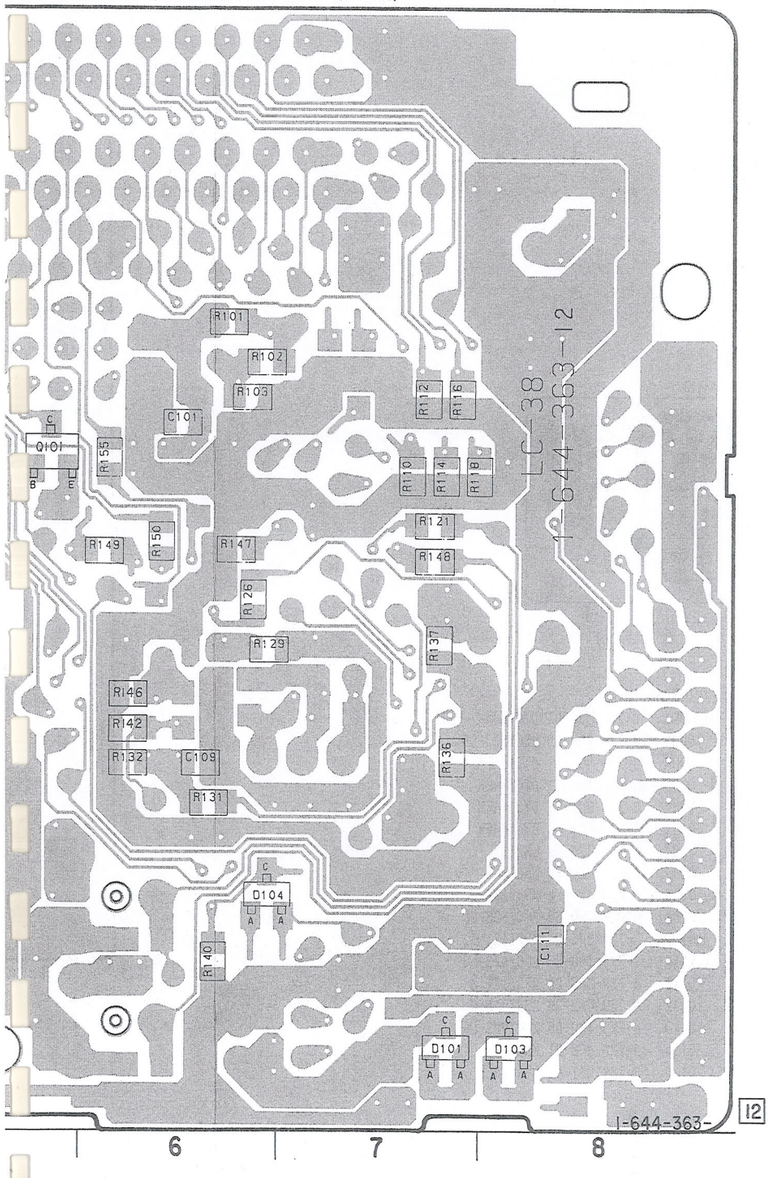

LC-38 BOARD	
D101	E-7
D102	D-2
D103	E-8
D104	E-6
D105	E-1
IC101	C-3
IC102	E-2
IC104	E-3
Q101	C-5
Q106	D-2

< DIODE >

⚠D101	8-719-400-18	MA152WK
D102	8-719-400-18	MA152WK
⚠D103	8-719-400-18	MA152WK
D104	8-719-400-18	MA152WK
⚠D105	8-719-400-18	MA152WK

< IC >

IC101	8-759-093-43	MB89093-106
IC102	8-759-999-02	TL1596CDB
IC104	8-759-074-40	PST572DMT-T1

< TRANSISTOR >

Q101	8-729-421-19	UN2213
Q106	8-729-420-20	XN4312

LC-38BOARD

1

IC101 ④ REC/PB 5Vp-p(10MHz)

Note : The components identified by mark ⚠ or dotted line with mark ⚠ are critical for safety.
Replace only with part number specified.

LC-38 (MODE CONTROL) SCHEMATIC DIAGRAM

—Ref.No.LC-38 BOARD : 3000 series—

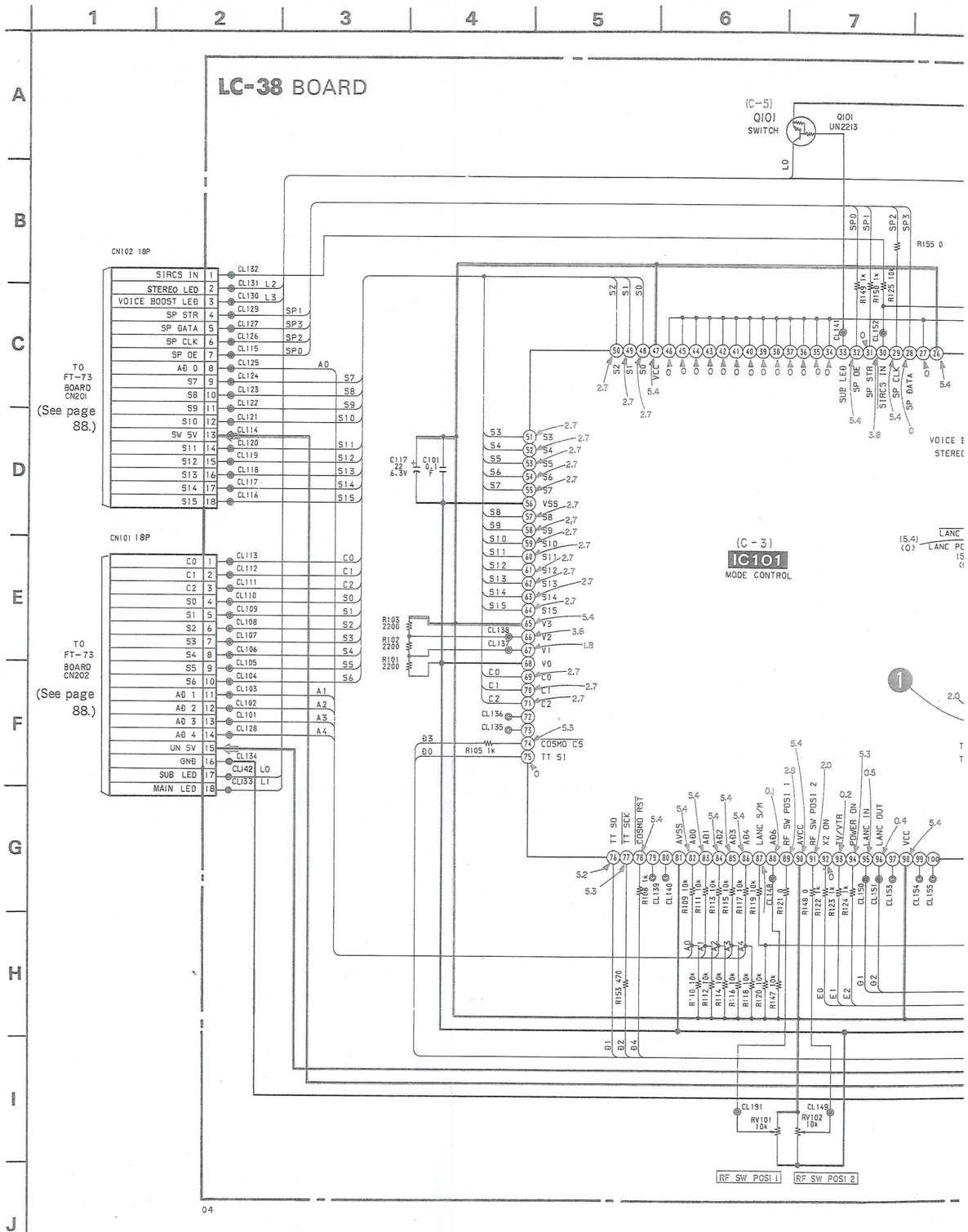

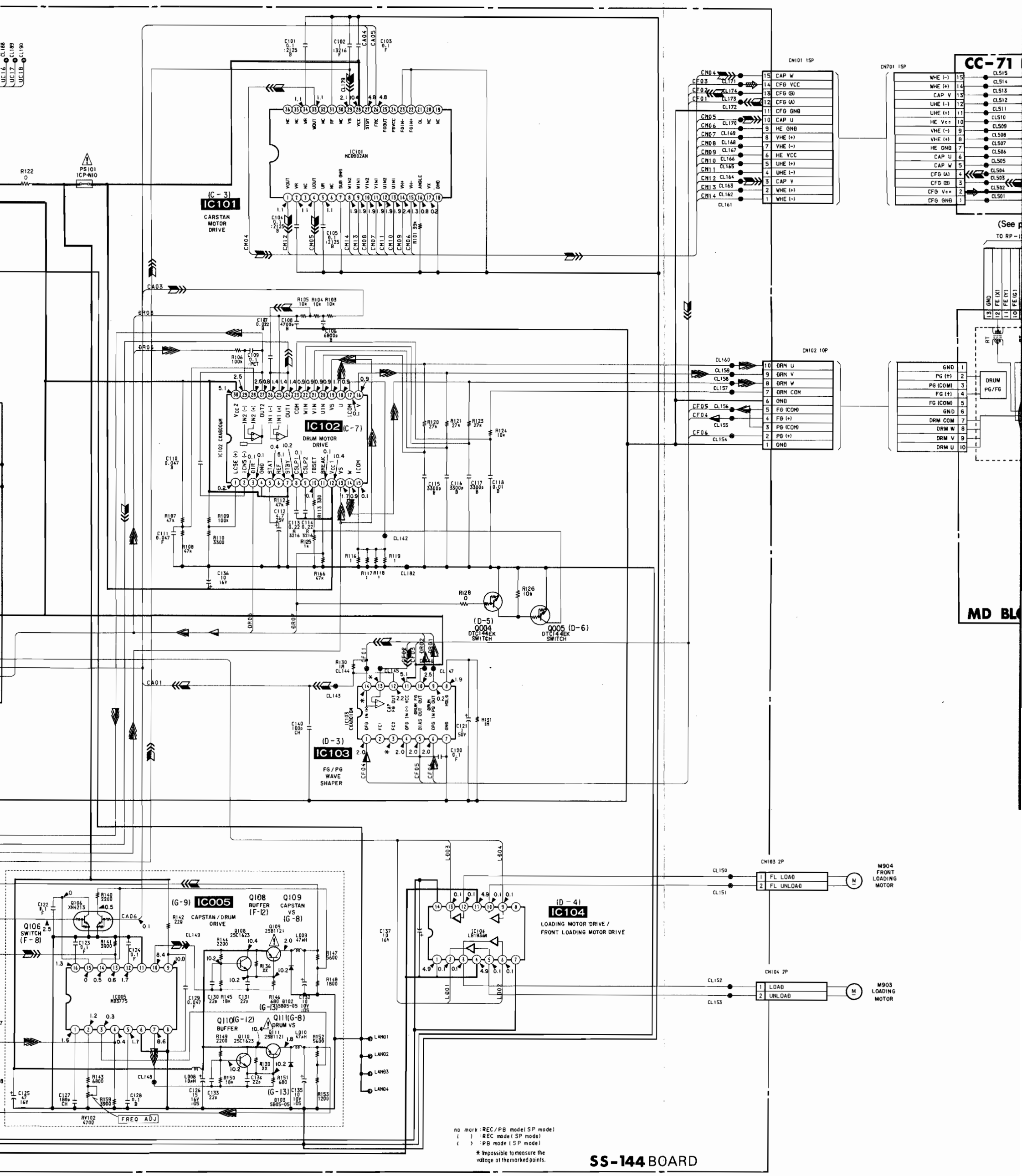
IC101
MC8002AN
CARSTAN MOTOR DRIVE
IC102 (C-7)
DRUM MOTOR DRIVE
IC103
FG/PG WAVE SHAPER
IC104
LOADING MOTOR DRIVE / FRONT LOADING MOTOR DRIVE
IC005
Q004 DTC144EK SWITCH
Q005 (D-6) DTC144EK SWITCH
Q106 SWITCH (F-8)
CAPSTAN / DRUM DRIVE
BUFFER
DRUM VS
CAPSTAN VS
CN101 15P
CN102 10P
CN103 2P
CN104 2P
CN701 15P
CC-71
M904 FRONT LOADING MOTOR
M903 LOADING MOTOR
DRUM PG/FG
FREQ ADJ
no mark : REC/PB mode (SP mode)
( ) : REC mode (SP mode)
< > : PB mode (SP mode)
* : Impossible to measure the voltage at the marked points.
SS-144 BOARD

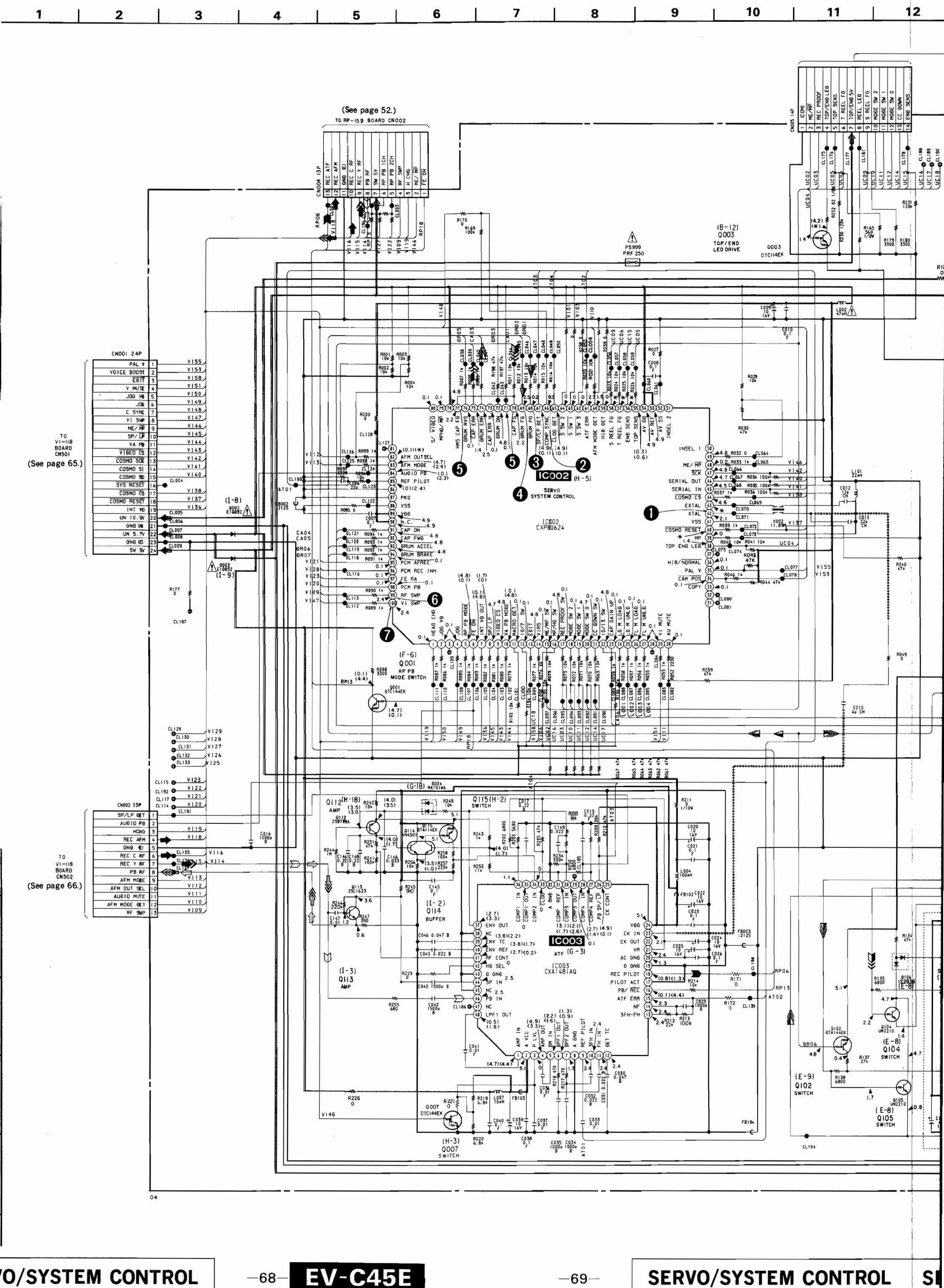
1 2 3 4 5 6 7 8 9 10 11 12
(See page 52.)
TO RP-159 BOARD CN002
CN004 13P
REC ATF
REC AFM
GND (E)
REC C RF
REC Y RF
PB RF
SW 5V
RP PB 1CH
RP PB 2CH
RF SWP
H CHG
ME/ MP
FE ON
CN005 14P
(COM)
ME/MP
REC PROOF
TOP/END LED
TOP SENS
T REEL FG
TOP/END 5V
REEL LED
S REEL FG
MODE SW 2
MODE SW 1
MODE SW 0
CC DOWN
END SENS
(B-12) Q003 TOP/END LED DRIVE
Q003 DTC114EK
PS999 PRF 250
CN001 24P
PAL V
VOICE BOOST
EDIT
V MUTE
JOG VB
JOG
C SYNC
VI SW
ME/ MP
SP/ LP
VA PB
VIDEO CS
COSMO SCK
COSMO SI
COSMO SO
SYS RESET
COSMO CS
COSMO RESET
INT VD
UN 10.5V
GND (D)
UN 5.7V
GND (E)
SW 5V
TO VI-118 BOARD CN501
(See page 65.)
IC002 (H-5) SERVO SYSTEM CONTROL
IC002 CXP80624
SP/LP DET
AUDIO PB
HCHG
REC AFM
GND (E)
REC C RF
REC Y RF
PB RF
AFM MODE
AFM OUT SEL
AUDIO MUTE
AFM MODE DET
RF SWP
TO VI-118 BOARD CN502
(See page 66.)
(I-8) Q002 ET0092
(I-9) Q003 ET0052
(F-6) Q001 RP PB MODE SWITCH
Q001 DTC144EK
(G-18) D004 MA151WA
Q112 (H-18) AMP
Q115 (H-2) SWITCH
Q116 DTA114EK
Q113 2SC1623
(I-2) Q114 BUFFER
IC003 ATF (G-3)
IC003 CXA1481AQ
(I-3) Q113 AMP
Q007 DTC144EK
(H-3) Q007 SWITCH
Q102 DTA144EK
(E-8) Q104 SWITCH
(E-9) Q102 SWITCH
Q105 UN2210
(E-8) Q105 SWITCH
Q106 2SB536 (E-8)
04

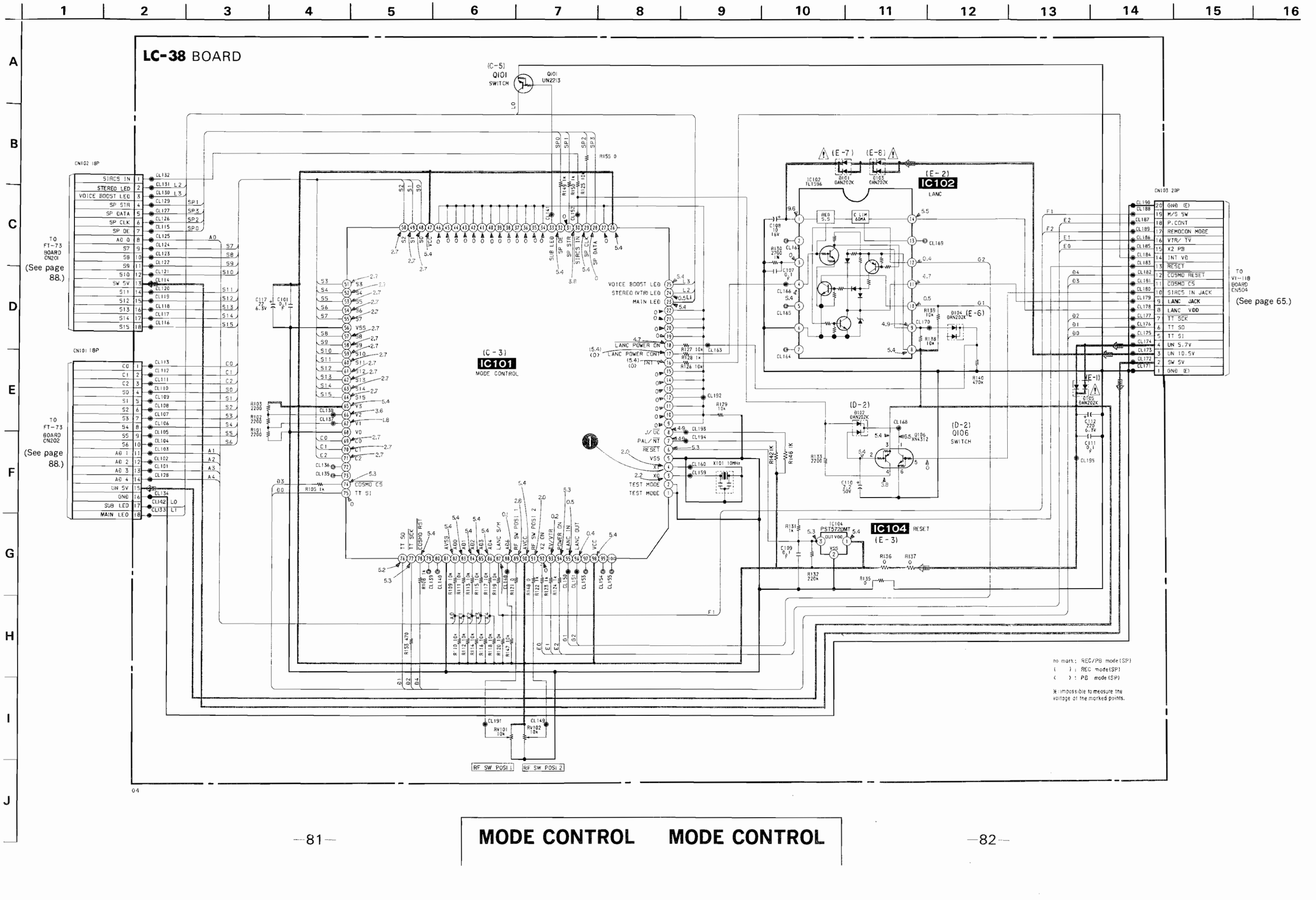
LC-38 BOARD
(C-5)
Q101
SWITCH
Q101
UN2213
IC101
MODE CONTROL
(C-3)
IC102
LANC
(E-2)
(E-7)
(E-8)
D101
DAN202K
D103
DAN202K
D104
DAN202K
(E-6)
D105
DAN202K
(E-1)
(D-2)
D102
DAN202K
Q106
XN4312
(D-2)
Q106
SWITCH
IC104
PST572DMT
RESET
(E-3)
X101 10MHz
CN102 18P
CN101 18P
CN103 20P
TO FT-73 BOARD CN201
(See page 88.)
TO FT-73 BOARD CN202
(See page 88.)
TO VI-118 BOARD CN504
(See page 65.)
SIRCS IN
STEREO LED
VOICE BOOST LED
SP STR
SP DATA
SP CLK
SP OE
SUB LED
MAIN LED
GND
VOICE BOOST LED
STEREO (VTR) LED
MAIN LED
LANC POWER ON
LANC POWER CONT
INT
PAL/NT
RESET
VSS
TEST MODE
TT SCK
TT SO
TT SI
COSMO RST
COSMO CS
LANC S/M
RF SW POSI 1
RF SW POSI 2
X2 ON
PAL/VTR
POWER ON
LANC IN
LANC OUT
GND (E)
M/S SW
P.CONT
REMOCON MODE
VTR/ TV
X2 PB
INT VD
RESET
COSMO RESET
COSMO CS
SIRCS IN JACK
LANC JACK
LANC VDD
TT SCK
TT SO
TT SI
UN 5.7V
UN 10.5V
SW 5V
GND (E)
no mark: REC/PB mode (SP)
( ) : REC mode (SP)
< > : PB mode (SP)
* : impossible to meosure the voltage at the marked points.

AU-123 (AUDIO PROCESS) PRINTED WIRING BOARD

—Ref.No.AU-123 BOARD : 4000 series—

< DIODE >

D503	8-719-800-76	1SS226
D504	8-719-404-46	MA110
D505	8-719-404-46	MA110

< IC >

IC501	8-759-100-93	uPC393G2
IC502	8-759-009-51	MC14538BF
IC901	8-759-077-11	CXA1542Q
IC902	8-752-334-42	CXD2106Q

< TRANSISTOR >

Q507	8-729-402-19	XN6501
Q508	8-729-402-13	XN1501
Q509	8-729-422-36	2SB709A-Q
Q510	8-729-403-07	XN1213
Q511	8-729-402-19	XN6501
Q512	8-729-422-27	2SD601A-Q
Q513	8-729-403-07	XN1213
Q514	8-729-421-90	XN4113
Q515	8-729-403-07	XN1213
Q516	8-729-421-19	UN2213
Q517	8-729-402-19	XN6501
Q901	8-729-402-19	XN6501
Q902	8-729-422-27	2SD601A-Q
Q903	8-729-402-19	XN6501
Q904	8-729-422-27	2SD601A-Q
Q909	8-729-922-87	2SD1757K-RS
Q910	8-729-922-87	2SD1757K-RS
Q911	8-729-421-19	UN2213
Q914	8-729-424-18	UN2113
Q915	8-729-402-19	XN6501
Q916	8-729-402-19	XN6501
Q917	8-729-403-07	XN1213

AU-123 BOARD(COMPONENT SIDE)

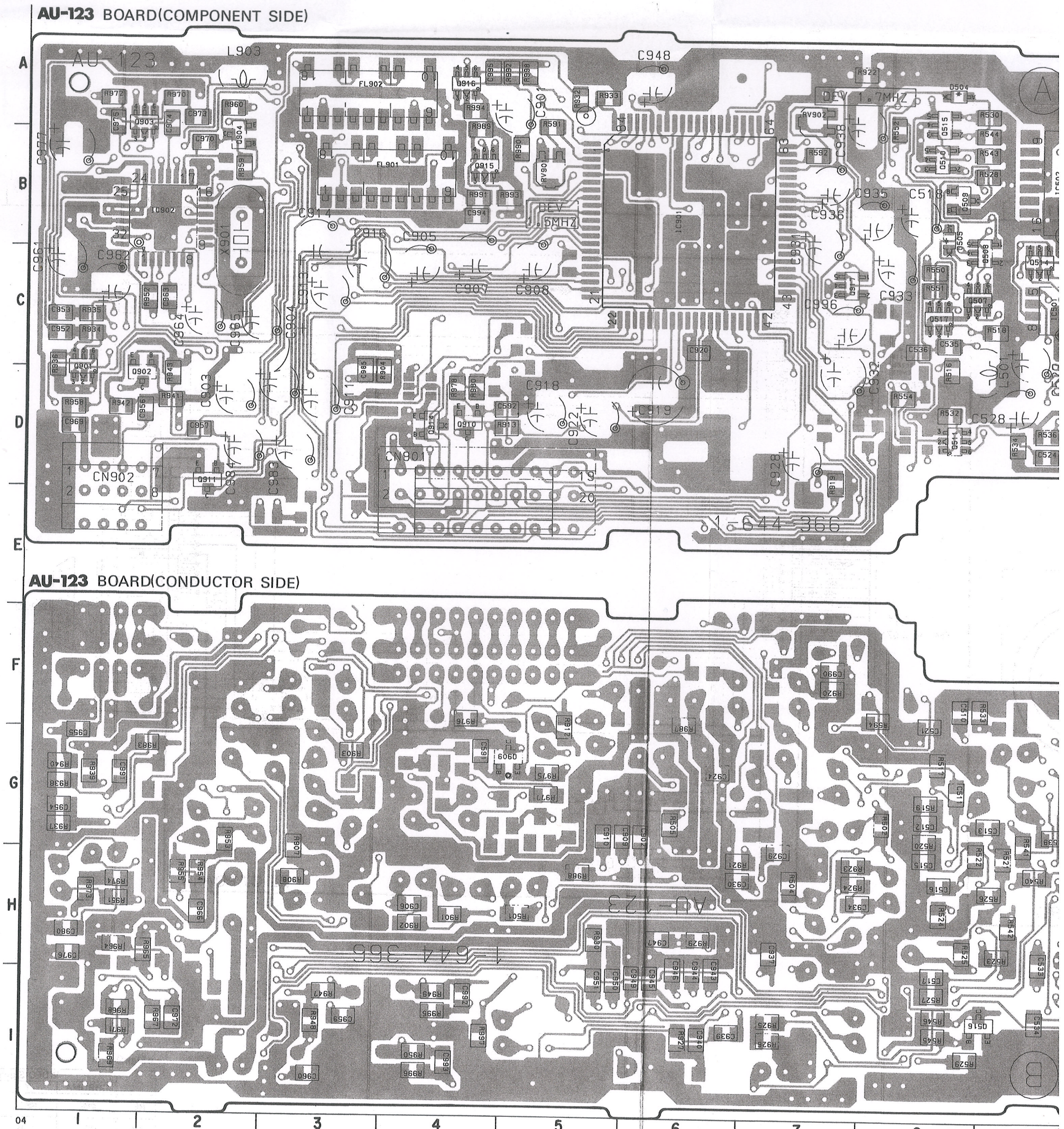

AU-123 BOARD(CONDUCTOR SIDE)

< DIODE >

D503	8-719-800-76	1SS226
D504	8-719-404-46	MA110
D505	8-719-404-46	MA110

< IC >

IC501	8-759-100-93	uPC393G2
IC502	8-759-009-51	MC14538BF
IC901	8-759-077-11	CXA1542Q
IC902	8-752-334-42	CXD2106Q

< TRANSISTOR >

Q507	8-729-402-19	XN6501
Q508	8-729-402-13	XN1501
Q509	8-729-422-36	2SB709A-Q
Q510	8-729-403-07	XN1213
Q511	8-729-402-19	XN6501
Q512	8-729-422-27	2SD601A-Q
Q513	8-729-403-07	XN1213
Q514	8-729-421-90	XN4113
Q515	8-729-403-07	XN1213
Q516	8-729-421-19	UN2213
Q517	8-729-402-19	XN6501
Q901	8-729-402-19	XN6501
Q902	8-729-422-27	2SD601A-Q
Q903	8-729-402-19	XN6501
Q904	8-729-422-27	2SD601A-Q
Q909	8-729-922-87	2SD1757K-RS
Q910	8-729-922-87	2SD1757K-RS
Q911	8-729-421-19	UN2213
Q914	8-729-424-18	UN2113
Q915	8-729-402-19	XN6501
Q916	8-729-402-19	XN6501
Q917	8-729-403-07	XN1213

AU-123 (AUDIO PROCESS) SCHEMA

—Ref.No.AU-123 BOARD : 4000 serie

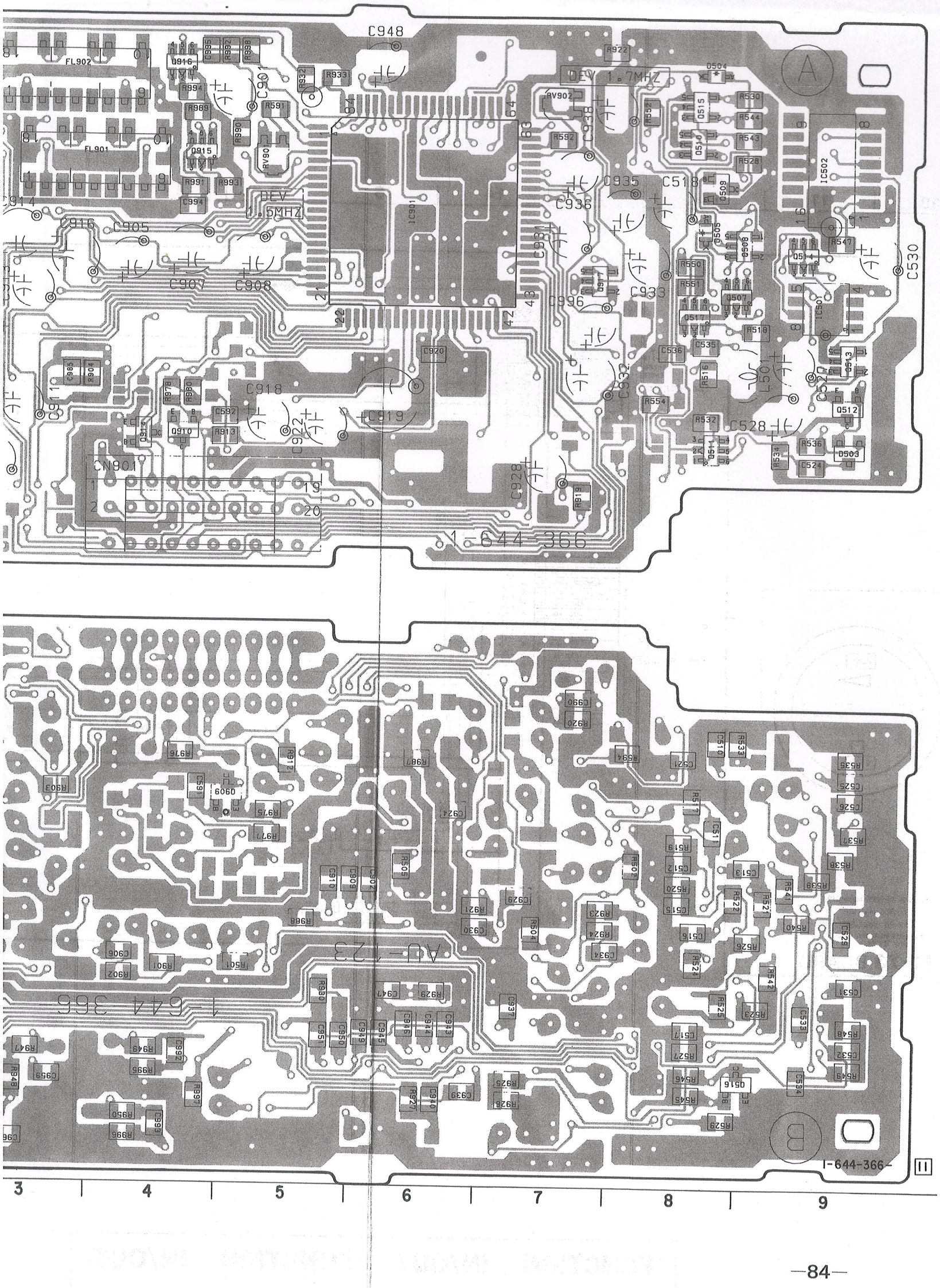

AU-123 BOARD

D503	D-9
D504	A-8
D505	B-8
IC501	C-9
IC502	B-9
IC901	B-6
IC902	B-2
Q507	C-8
Q508	C-9
Q509	B-8
Q510	B-8
Q511	D-8
Q512	D-9
Q513	C-9
Q514	C-9
Q515	A-8
Q516	I-8
Q517	C-8
Q901	D-1
Q902	D-1
Q903	A-1
Q904	B-2
Q909	G-5
Q910	D-4
Q911	D-2
Q914	D-4
Q915	B-4
Q916	A-4
Q917	C-7

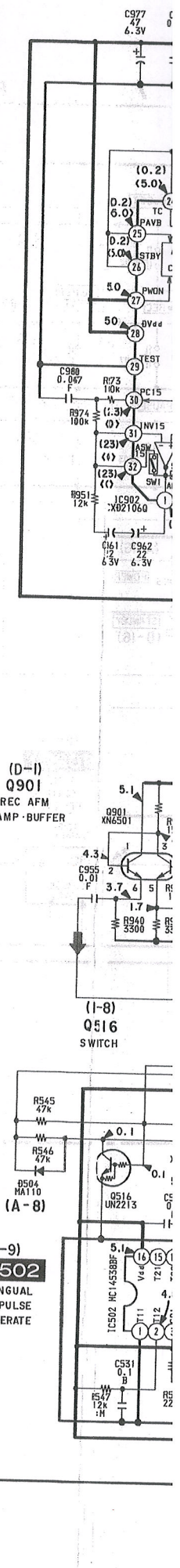

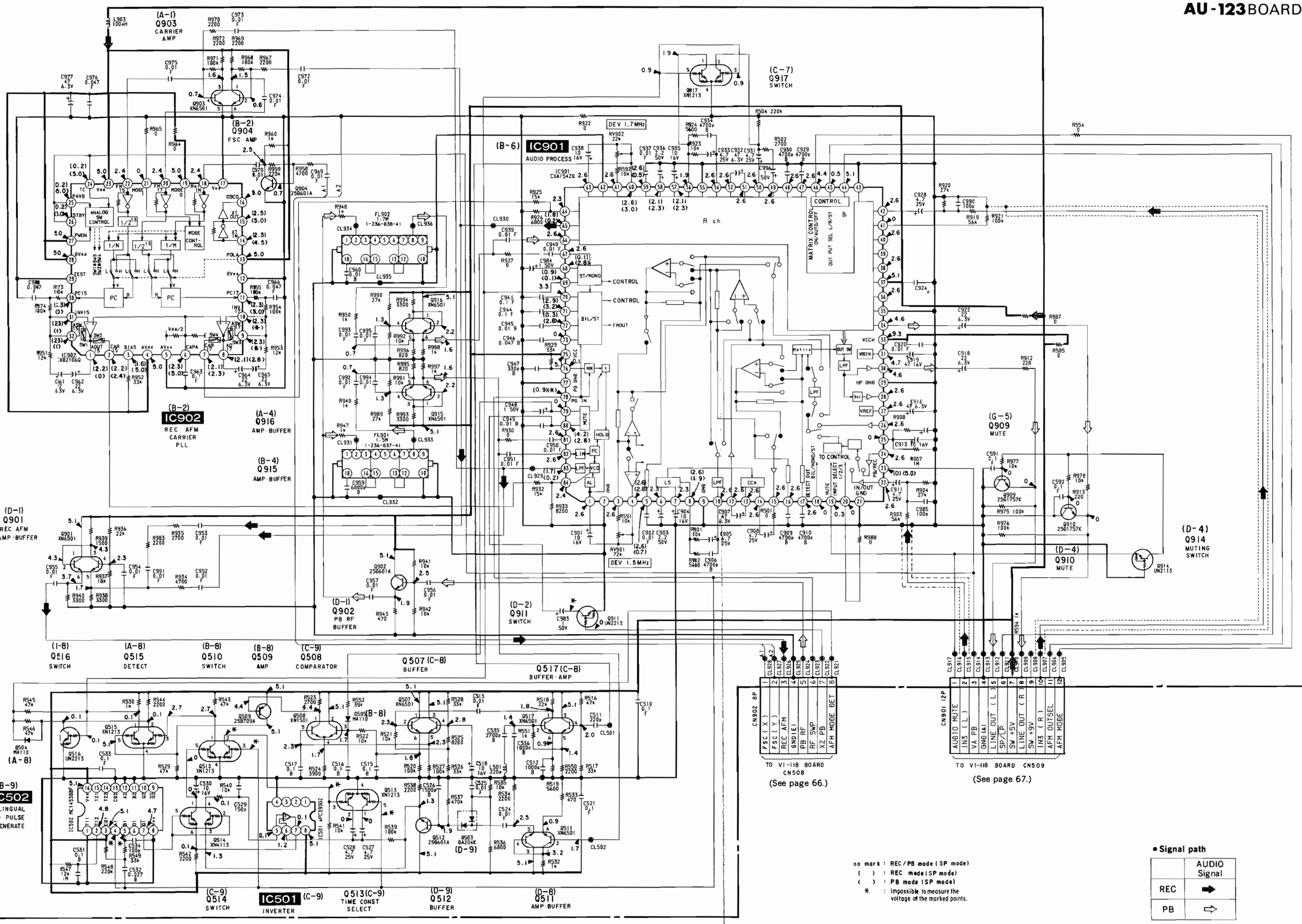
(A-1) Q903 CARRIER AMP
(B-2) Q904 FSC AMP
(B-2) IC902 REC AFM CARRIER PLL
(A-4) Q916 AMP·BUFFER
(B-4) Q915 AMP·BUFFER
(D-1) Q901 REC AFM AMP·BUFFER
(D-1) Q902 PB RF BUFFER
(B-6) IC901 AUDIO PROCESS
(C-7) Q917 SWITCH
(D-2) Q911 SWITCH
(G-5) Q909 MUTE
(D-4) Q910 MUTE
(D-4) Q914 MUTING SWITCH
(I-8) Q516 SWITCH
(A-8) Q515 DETECT
(B-8) Q510 SWITCH
(B-8) Q509 AMP
(C-9) Q508 COMPARATOR
Q507 (C-8) BUFFER
Q517 (C-8) BUFFER·AMP
(B-9) IC502 BILINGUAL ID PULSE GENERATE
(C-9) Q514 SWITCH
IC501 (C-9) INVERTER
Q513 (C-9) TIME CONST SELECT
(D-9) Q512 BUFFER
(D-8) Q511 AMP·BUFFER
CN902 8P
CN901 12P
TO VI-118 BOARD CN508
(See page 66.)
TO VI-118 BOARD CN509
(See page 67.)
no mark : REC / PB mode (SP mode)
( ) : REC mode (SP mode)
( ) : PB mode (SP mode)
* : Impossible to measure the voltage at the marked points.
• Signal path
AUDIO Signal
REC
PB

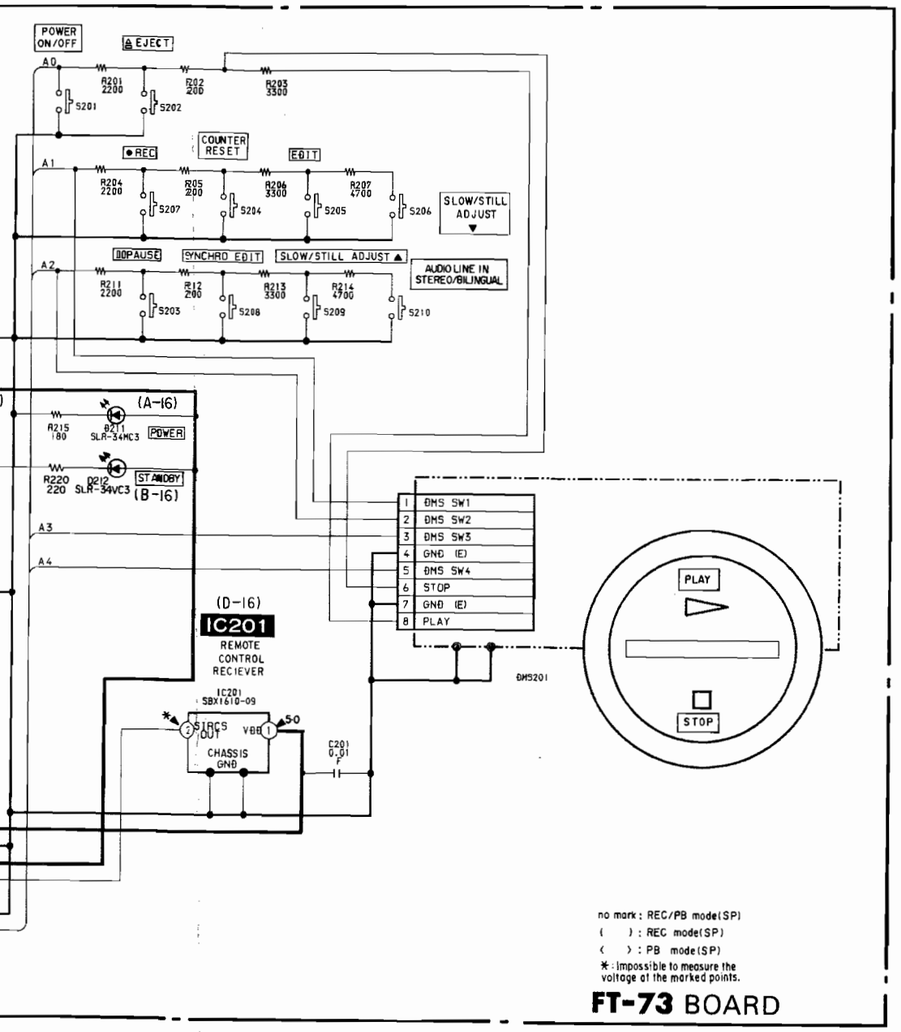

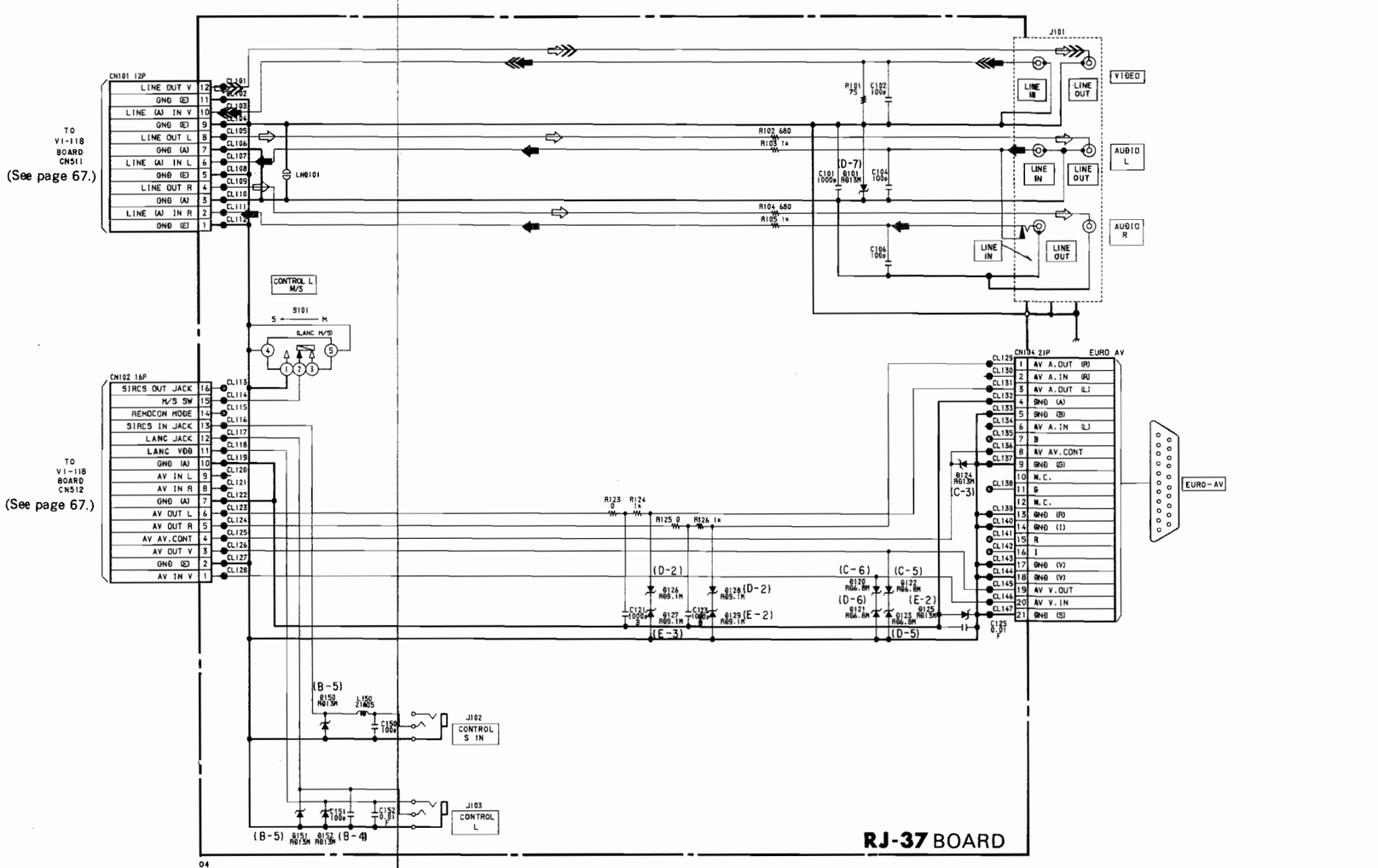

• Signal path

	VIDEO Signal			AUDIO Signal
	CHROMA	Y	Y/CHROMA	
REC	➡	➡	➡	➡
PB	⇨	⇨	⇨	⇨

FUNCTION IN/OUT

FUNCTION IN/OUT

FT-73 (FUNCTION SWITCH), RJ-37 (IN/OUT JACK) SCHEMATIC DIAGRAM

—Ref. No. FT-73 and RJ-37 BOARD : 5000 series —

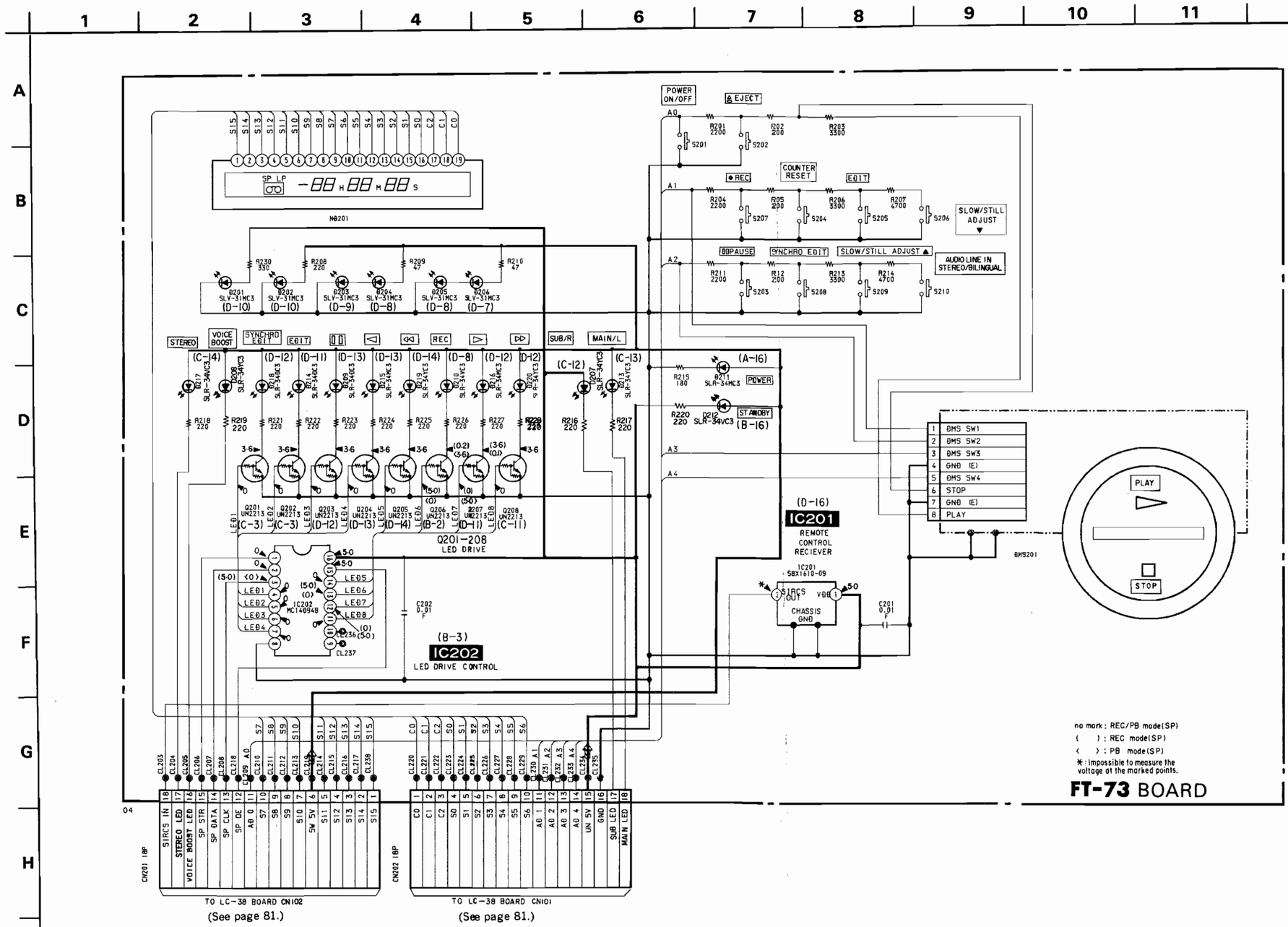

FT-73 (FUNCTION SWITCH), RJ-37 (IN/OUT JACK) PRINTED WIRING BOARDS

—Ref.No.FT-73 and RJ-37 BOARD : 5000 series —

FT-73 BOARD

D201	D-10
D202	D-10
D203	D-9
D204	D-8
D205	D-8
D206	D-7
D207	C-12
D209	D-13
D210	D-8
D211	A-16
D212	B-16
D213	C-13
D214	D-11
D215	D-13
D216	D-12
D217	C-14
D218	D-12
D219	D-14
D220	D-12
IC201	D-16
IC202	B-3
Q201	C-3
Q202	C-3
Q203	D-12
Q204	D-13
Q205	D-14
Q206	B-2
Q207	D-11
Q208	C-11

FT-73 BOARD

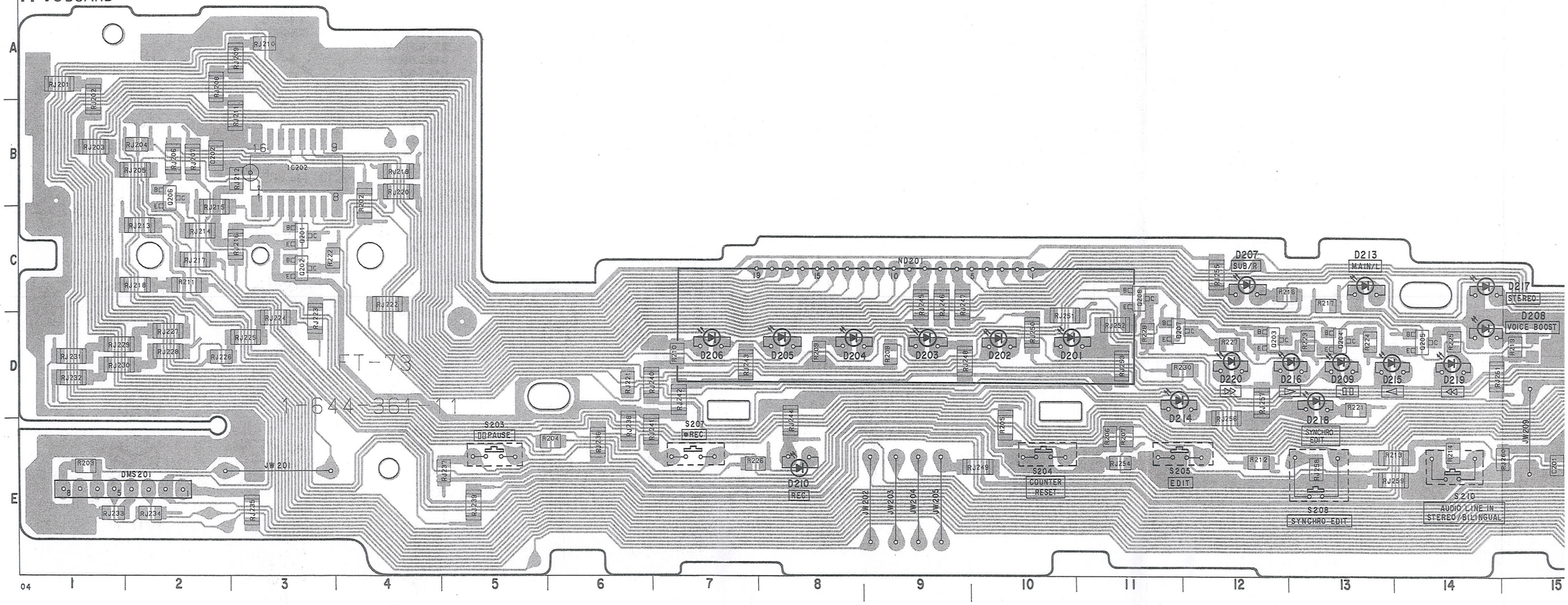

< DIODE >

D201	8-719-951-35 SLV-31MC3	D219	8-719-812-32 TLY123 (⏮)
D202	8-719-951-35 SLV-31MC3	D220	8-719-812-32 TLY123 (⏭)
D203	8-719-951-35 SLV-31MC3		
D204	8-719-951-35 SLV-31MC3	< IC >	
D205	8-719-951-35 SLV-31MC3	IC201	8-741-100-47 SBX1610-09
D206	8-719-951-35 SLV-31MC3	IC202	8-759-009-22 MC14094BF
D207	8-719-812-32 TLY123 (SUB/R)		
D208	8-719-812-32 TLY123 (VOICE BOOST)	< TRANSISTOR >	
D209	8-719-946-30 SLR34DC3 (⏸)	Q201	8-729-421-19 UN2213
D210	8-719-940-99 SLR-34VC3 (REC)	Q202	8-729-421-19 UN2213
D211	8-719-940-82 SLR-34MC3 (POWER)	Q203	8-729-421-19 UN2213
D212	8-719-940-99 SLR-34VC3 (STANDBY)	Q204	8-729-421-19 UN2213
D213	8-719-812-32 TLY123 (MAIN/L)	Q205	8-729-421-19 UN2213
D214	8-719-946-30 SLR-34DC3 (EDIT)	Q206	8-729-421-19 UN2213
D215	8-719-940-82 SLR-34MC3 (◁)	Q207	8-729-421-19 UN2213
D216	8-719-940-82 SLR-34MC3 (▷)	Q208	8-729-421-19 UN2213
D217	8-719-940-99 SLR-34VC3 (STEREO)		
D218	8-719-946-30 SLR-34DC3 (SYNCHRO EDIT)		

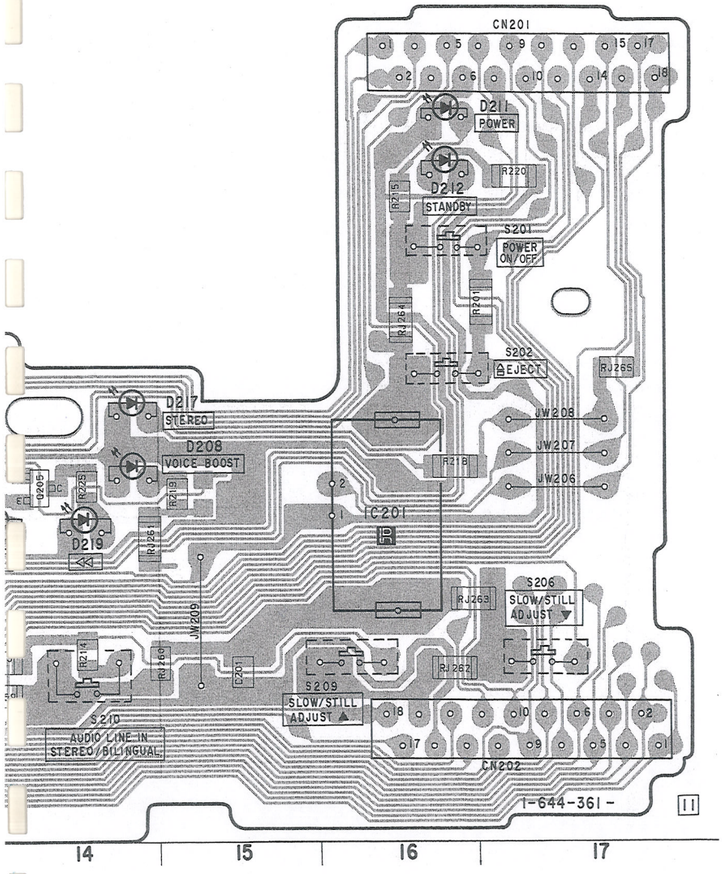

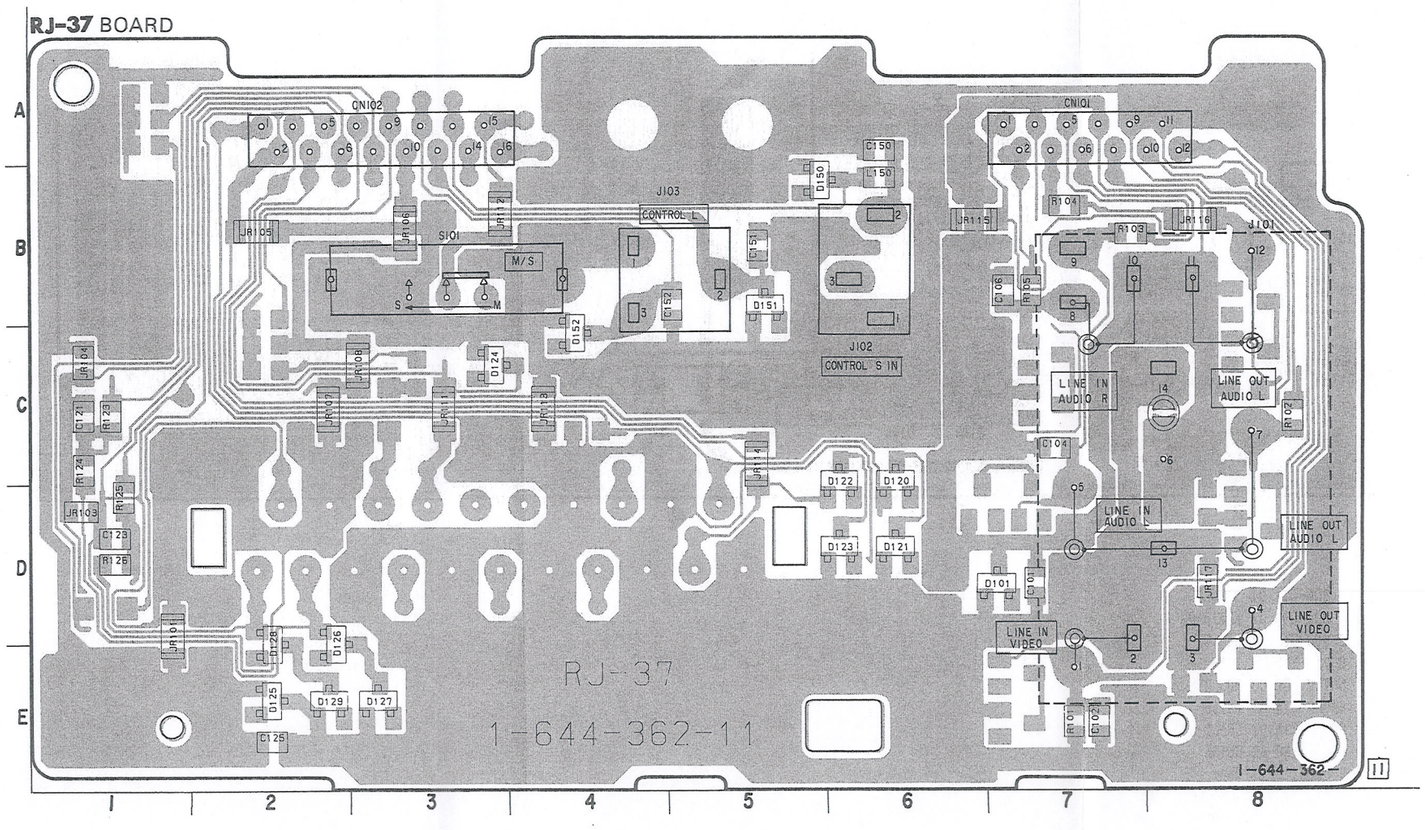

RJ-37 BOARD

D101	D-7
D120	C-6
D121	D-6
D122	C-5
D123	D-5
D124	C-3
D125	E-2
D126	D-2
D127	E-3
D128	D-2
D129	E-2
D150	B-5
D151	B-5
D152	B-4

< DIODE >

D101	8-719-106-80 RD13M-B2
D120	8-719-106-17 RD6.8M-B2
D121	8-719-106-17 RD6.8M-B2
D122	8-719-106-17 RD6.8M-B2
D123	8-719-106-17 RD6.8M-B2
D124	8-719-106-80 RD13M-B2
D125	8-719-106-80 RD13M-B2
D126	8-719-106-43 RD9.1M-B1
D127	8-719-106-43 RD9.1M-B1
D128	8-719-106-43 RD9.1M-B1
D129	8-719-106-43 RD9.1M-B1
D150	8-719-106-80 RD13M-B2
D151	8-719-106-80 RD13M-B2
D152	8-719-106-80 RD13M-B2

POWER SUPPLY (POWER) PRINTED WIRING BOARD

—Ref.No. POWER SUPPLY BOARD : 6000 series—

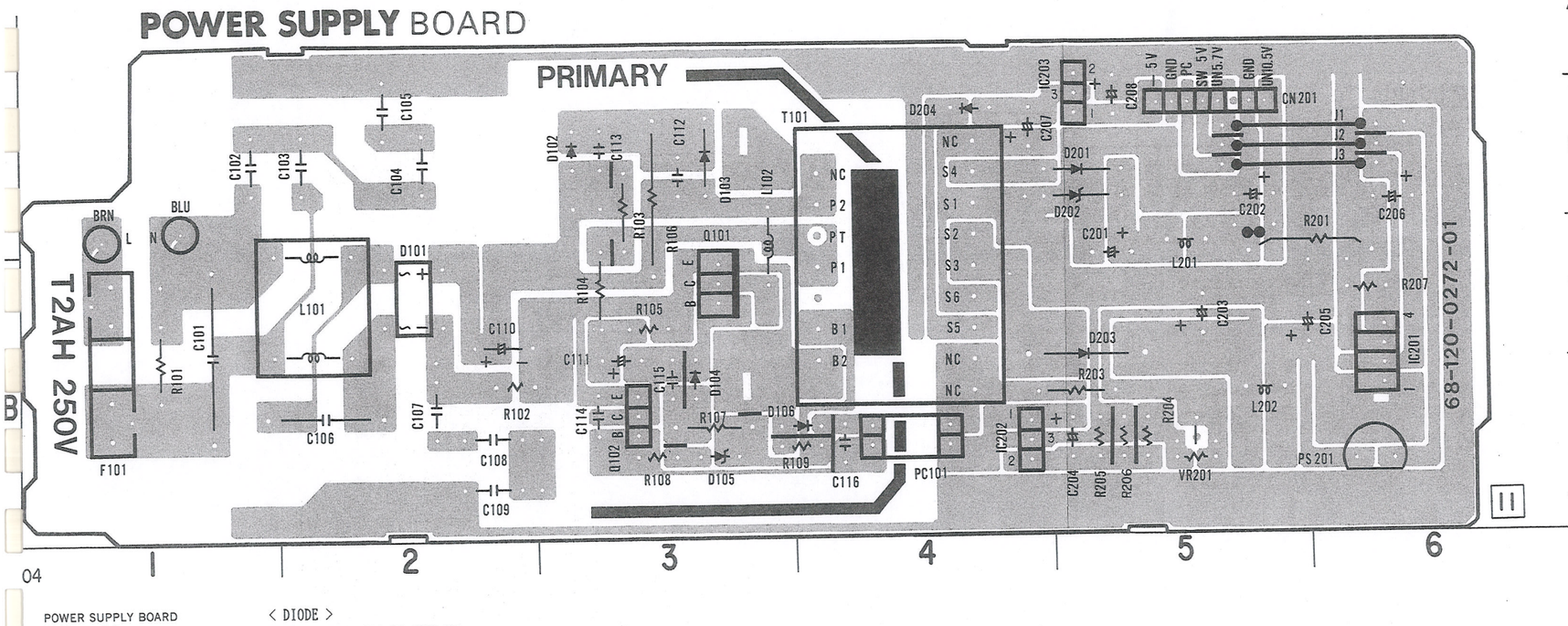

POWER SUPPLY BOARD

D101	B-2
D102	A-3
D103	A-3
D104	B-3
D105	B-3
D106	B-3
D201	A-5
D202	A-5
D203	B-5
D204	A-4
IC201	B-6
IC202	B-4
IC203	A-5
PC101	B-4
Q101	B-3
Q102	B-3

< DIODE >

⚠D101	9-900-511-01	S1WBA60
D102	9-902-095-01	ERA15-06
D103	9-900-512-01	EG01C
D104	8-719-200-82	11ES2
D105	8-719-109-63	RD3.0ESB2
D106	9-900-514-01	MA165
D201	9-903-218-01	ERA32-02
D202	8-719-160-61	RD15F
D203	9-903-219-01	RK44
D204	9-903-220-01	AK04

< IC >

⚠IC201	9-903-221-01	PQ05RF14
IC202	8-759-420-19	AN1431T
IC203	9-903-223-01	TA79L005P

< TRANSISTOR >

⚠Q101	9-903-184-01	2SC4231
Q102	9-900-517-01	2SC3377

POWER SUPPLY (POWER) SCHEMATIC DIAGRAM

—Ref.No. POWER SUPPLY BOARD : 6000 series—

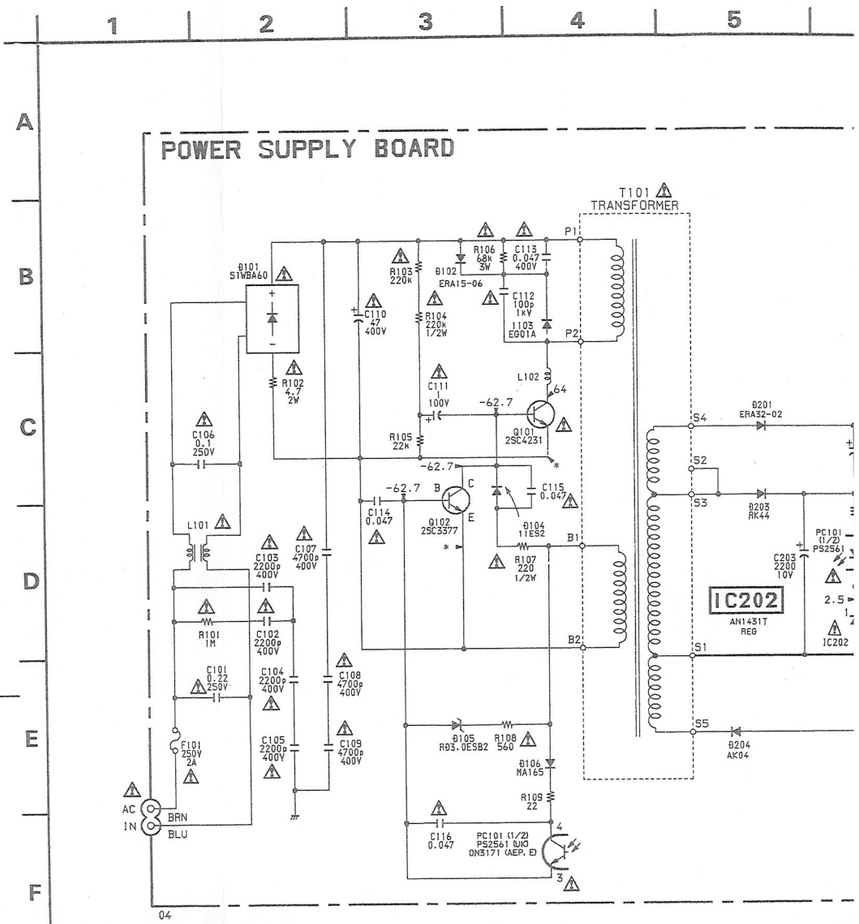

Note : The components identified by mark ⚠ or dotted line with mark ⚠ are critical for safety.
Replace only with part number specified.

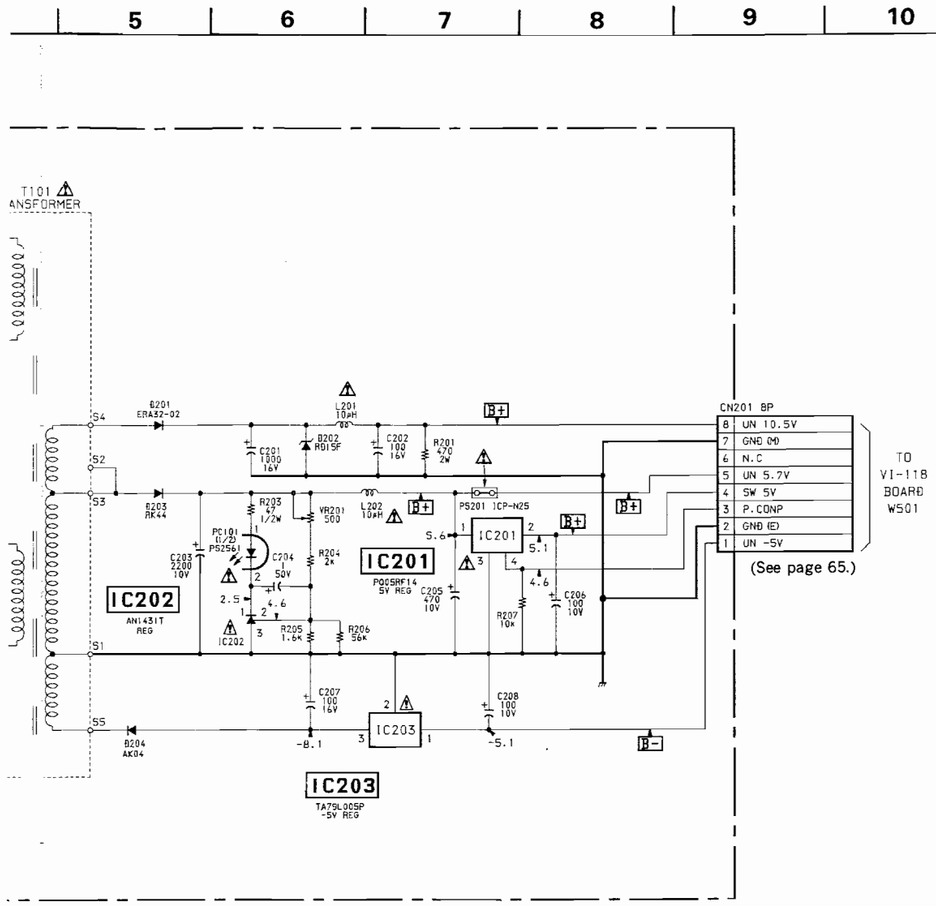

5-3. SEMICONDUCTORS

AN1431T

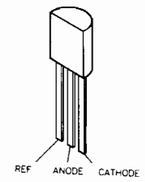

CXA8010M
LB1836M
TL1596CDB

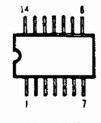

CXA1202Q-Z
CXA1208Q
CXA1443M
CXA1481AQ

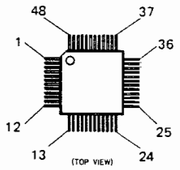

CXD2106Q

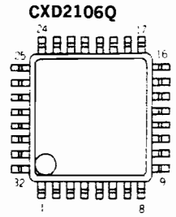

CXA1203M

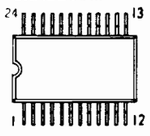

CXP80624-415Q

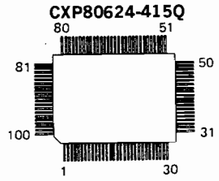

CXA1207AQ

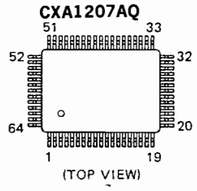

MB89093

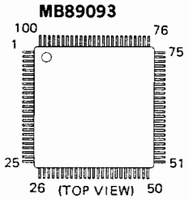

CXA1506M
MB3775PF

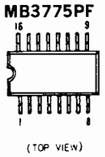

MC14094BF

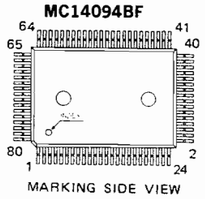

CXA8006M

MC14538BF

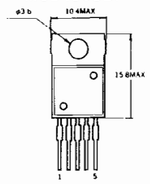

CXA1542Q

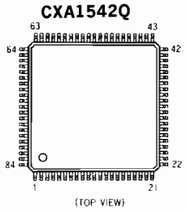

MCD002AM

PST600CMT

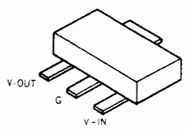

SC7SO4F

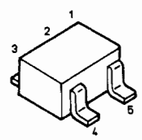

μPC393G2
μPC4558G2

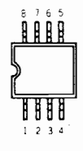

μPC574J

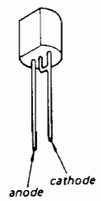

2SA1162-G
2SB709A-Q
2SC1623-L6
2SC2223-F13
2SC3326N-A
2SD1757K-RS
2SD601A-Q
DTA114EK
DTA144EK
DTC114EK
DTC144EK
UN2111
UN2113
UN2210
UN2213
UN2215

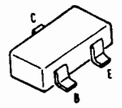

2SB1121-S
2SB798-DL

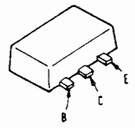

2SC3377
2SC4054

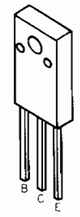

XN1213
XN1501

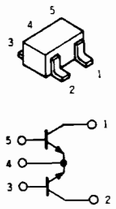

XN4113
XN4210
XN4212
XN4213
XN4215
XN4501

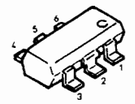

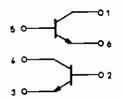

XN4312
XN4601

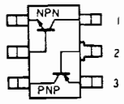

XN6501

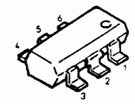

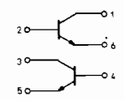

11ES2
AG01A
AU02Z
ERA15-06
MA165
RD3.0ES-B2

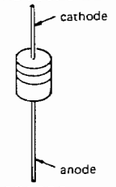

1S2836

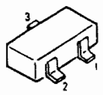

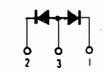

1SS226

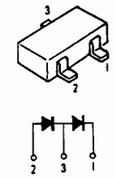

DAN202K

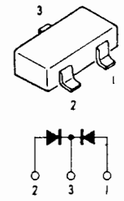

E10DS2

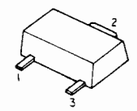

MA110

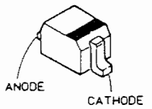

MA152WK

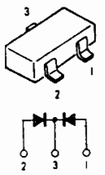

RB411D
RD13M-B2
RD5.6M-B2
RD6.8M-B2
RD9.1M-B2
SB05-05CP

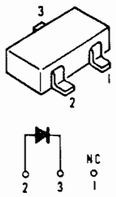

GL453JS

SLR34DC3

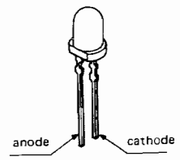

SLR34MC3
SLR34VC3
SLV-31MC3

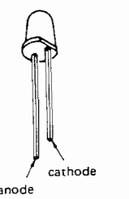

TLP907-0 (SONY2)

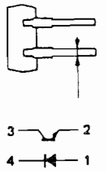

TLY123

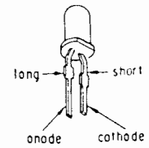

SECTION 6
EXPLODED VIEWS

NOTE:

- The mechanical parts with no reference number in the exploded views are not supplied.
- Items marked "*" are not stocked since they are seldom required for routine service. Some delay should be anticipated when ordering these items.
- -XX and -X mean standardized parts, so they may have some difference from the original one.
- Color Indication of Appearance Parts
  Example :
  KNOB, BALANCE (WHITE)... (RED)
  ↑ ↑
  Parts Color Cabinet's Color
- Hardware (# mark) list is given in the last of this parts list.

The components identified by mark ⚠ or dotted line with mark. ⚠ are critical for safety. Replace only with part number specified.

6-1. FRONT PANEL AND CASE ASSEMBLIES

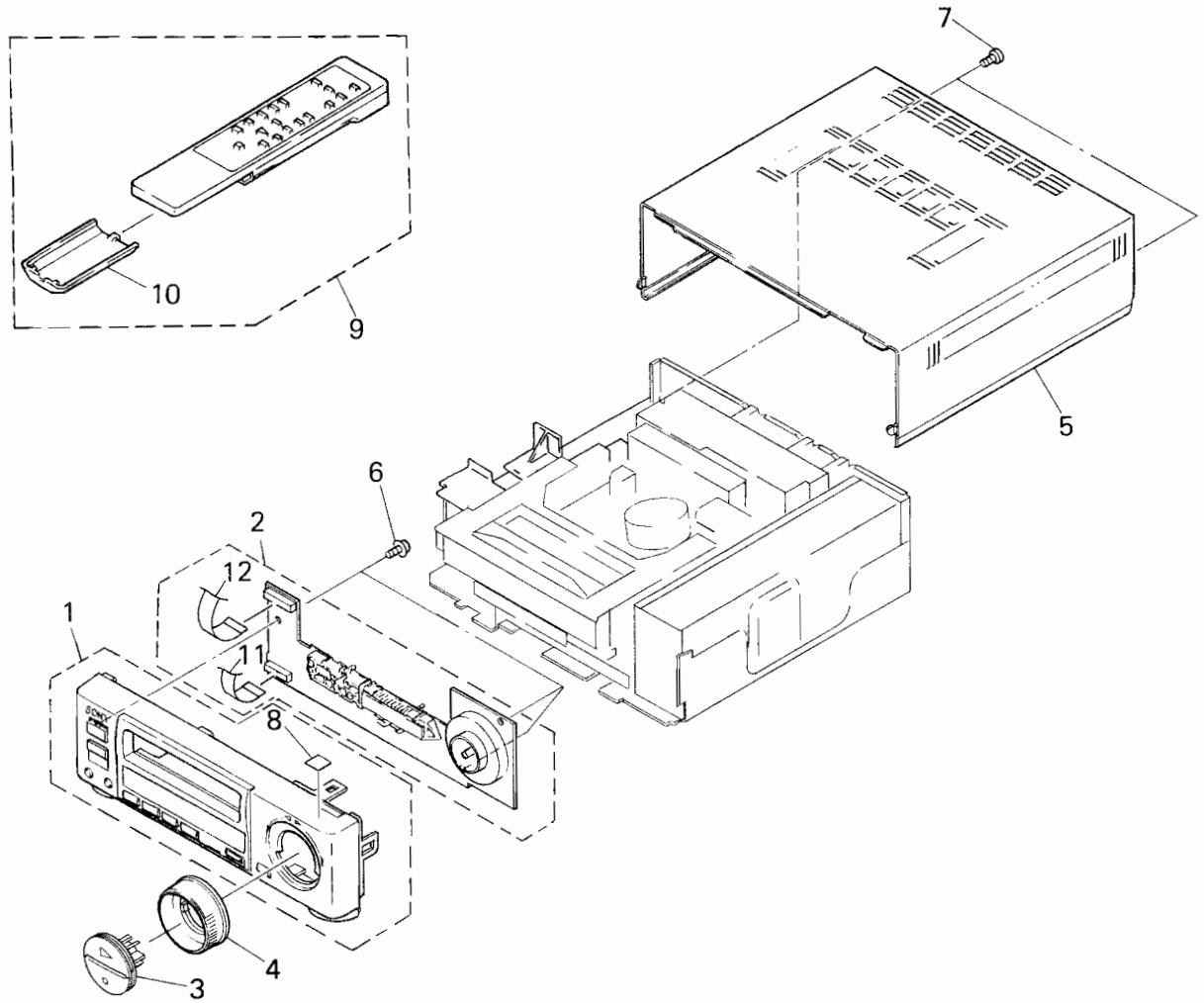

Ref. No.	Part No.	Description	Remark
1	X-3941-912-1	PANEL ASSY, FRONT (AEP, UK)	
1	X-3942-264-1	PANEL ASSY, FRONT (E)	
* 2	A-7063-202-A	FT-73 BOARD, COMPLETE	
3	X-3941-464-1	BUTTON ASSY, FUNCTION	
4	3-947-284-01	RING, SHUTTLE	
* 5	3-947-291-01	CASE, UPPER	
6	3-669-480-21	+ PTPWH 2	
7	3-948-500-01	SCREW, BV (3X10) RING	
* 8	3-703-713-41	STICKER, SONY SYMBOL (10)	
9	1-693-136-11	REMOTE COMMANDER (RMT-V124)	
10	2-181-754-01	COVER, BATTERY	
11	1-696-411-12	CABLE, FLAT (FFT-8) 18P	
12	1-690-799-11	CABLE, FLAT (FFT-3) 18P	

6-2. CHASSIS FRAME ASSEMBLY

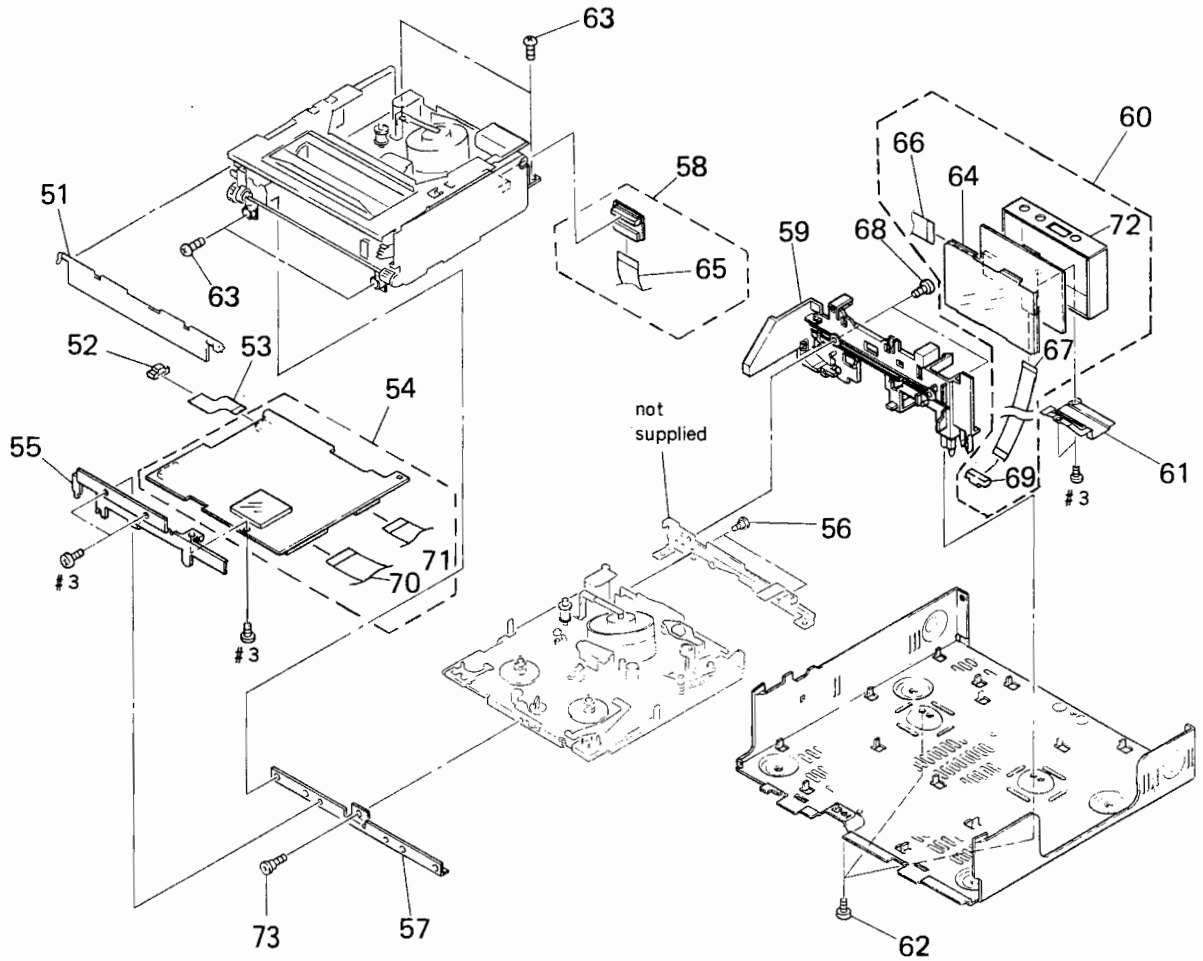

Ref. No.	Part No.	Description	Remark
51	3-947-278-11	WINDOW, CASSETTE COMPARTMENT	
52	1-569-346-11	CONNECTOR, FPC (TRANSLATION) 10P	
53	1-643-189-11	FP-503 FLEXIBLE BOARD	
* 54	A-7063-201-A	SS-144 BOARD, COMPLETE	
* 55	3-947-273-01	FRAME (FRONT), MD	
56	3-732-816-01	SCREW, STEP	
* 57	3-732-810-02	BRACKET (FRONT)	
58	A-7063-089-A	CC-71 BOARD, COMPLETE	
* 59	3-947-275-11	FRAME, RP	
* 60	A-7063-375-A	RP-159 BOARD, COMPLETE	
* 61	3-947-276-01	PLATE (MD), GROUND	
62	3-948-500-01	SCREW, BV (3X10) RING	

Ref. No.	Part No.	Description	Remark
63	3-732-817-01	SCREW (2X4.5), TAPPING	
* 64	3-947-292-01	CASE (LID), SHIELD, RP	
65	1-690-805-11	CABLE, FLAT (FCS-3) 15P	
66	1-690-803-11	CABLE, FLAT (FRS-9) 13P	
67	1-643-188-11	FP-502 FLEXIBLE BOARD	
68	3-719-381-01	SCREW (M2X4)	
69	1-569-347-11	CONNECTOR, FPC (TRANSLATION) 13P	
70	1-690-801-11	CABLE, FLAT (FSV-1) 24P	
71	1-690-042-11	CABLE, FLAT (FSV-4) 13P	
* 72	3-947-293-01	CASE (MAIN), SHIELD, RP	
73	3-732-816-21	SCREW, STEP	

6-3. MAIN BOARDS AND POWER BLOCK ASSEMBLIES

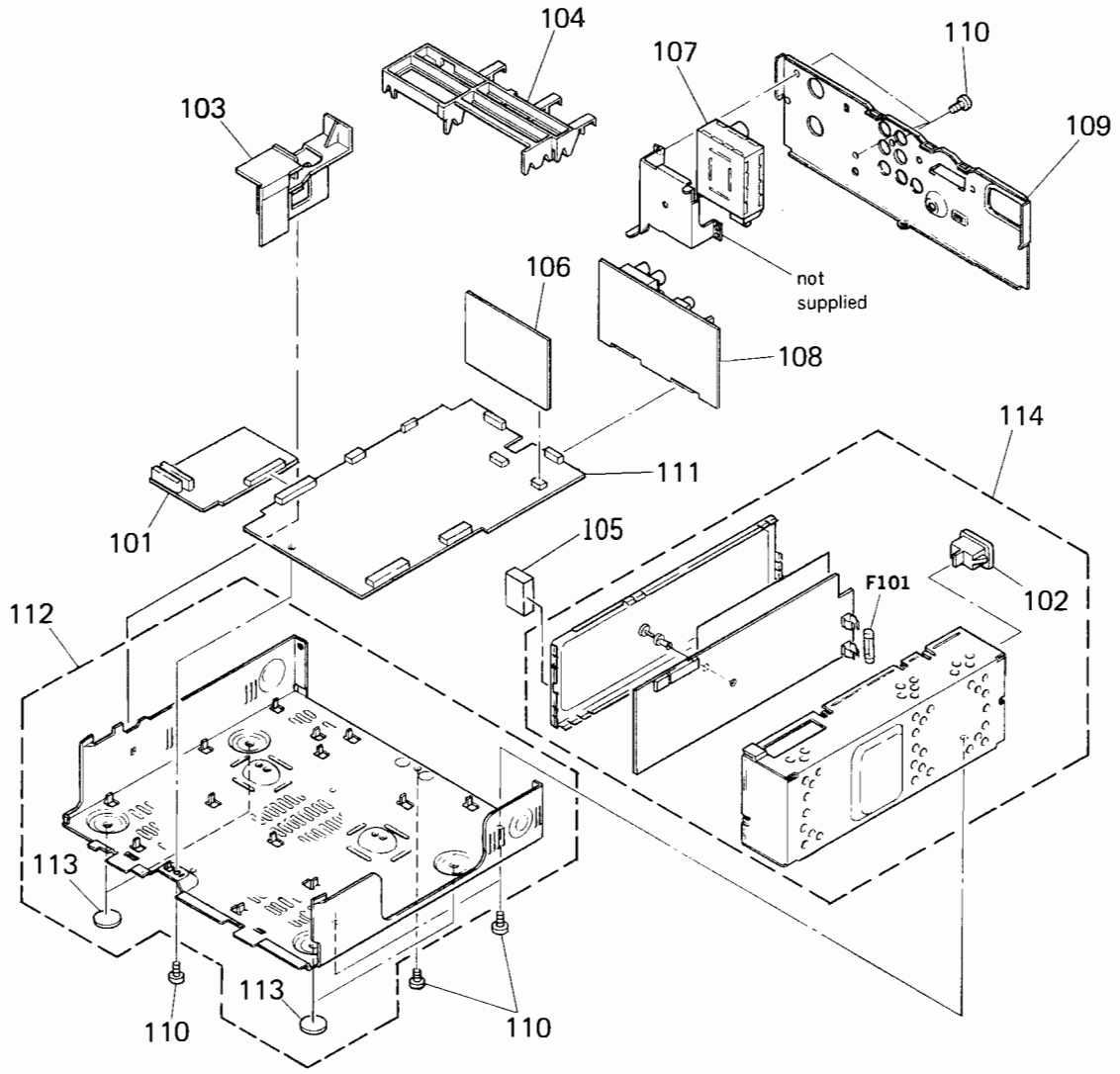

The components identified by mark ⚠ or dotted line with mark. ⚠ are critical for safety. Replace only with part number specified.

Ref. No.	Part No.	Description	Remark
* 101	A-7063-203-A	LC-38 BOARD, COMPLETE	
⚠102	9-903-247-01	AC INLET	
103	3-947-283-01	HOLDER, MAC	
* 104	3-947-294-01	HOLDER, PC BOARD	
105	3-950-246-01	SPACER (CASSETTE COMPARTMENT)	
* 106	A-7063-206-A	AU-123 BOARD, COMPLETE	
⚠107	1-466-328-31	MODULATOR, RF (RFU-2027)	
* 108	A-7063-205-A	RJ-37 BOARD, COMPLETE	
* 109	3-947-274-41	FRAME, REAR (UK)	
* 109	3-947-274-51	FRAME, REAR (AEP)	
* 109	3-947-274-81	FRAME, REAR (E)	
110	3-948-500-01	SCREW, BV (3X10) RING	
* 111	A-7063-374-A	VI-118 BOARD, COMPLETE	
* 112	X-3941-463-2	PLATE ASSY, BOTTOM	
113	3-940-657-01	FOOT (FELT)	
114	1-413-743-11	POWER BLOCK (AEP)	
114	1-413-767-11	POWER BLOCK (UK)	
⚠F101	9-903-217-01	FUSE 2A 250V (UK)	

6-4. CASSETTE COMPARTMENT ASSEMBLY

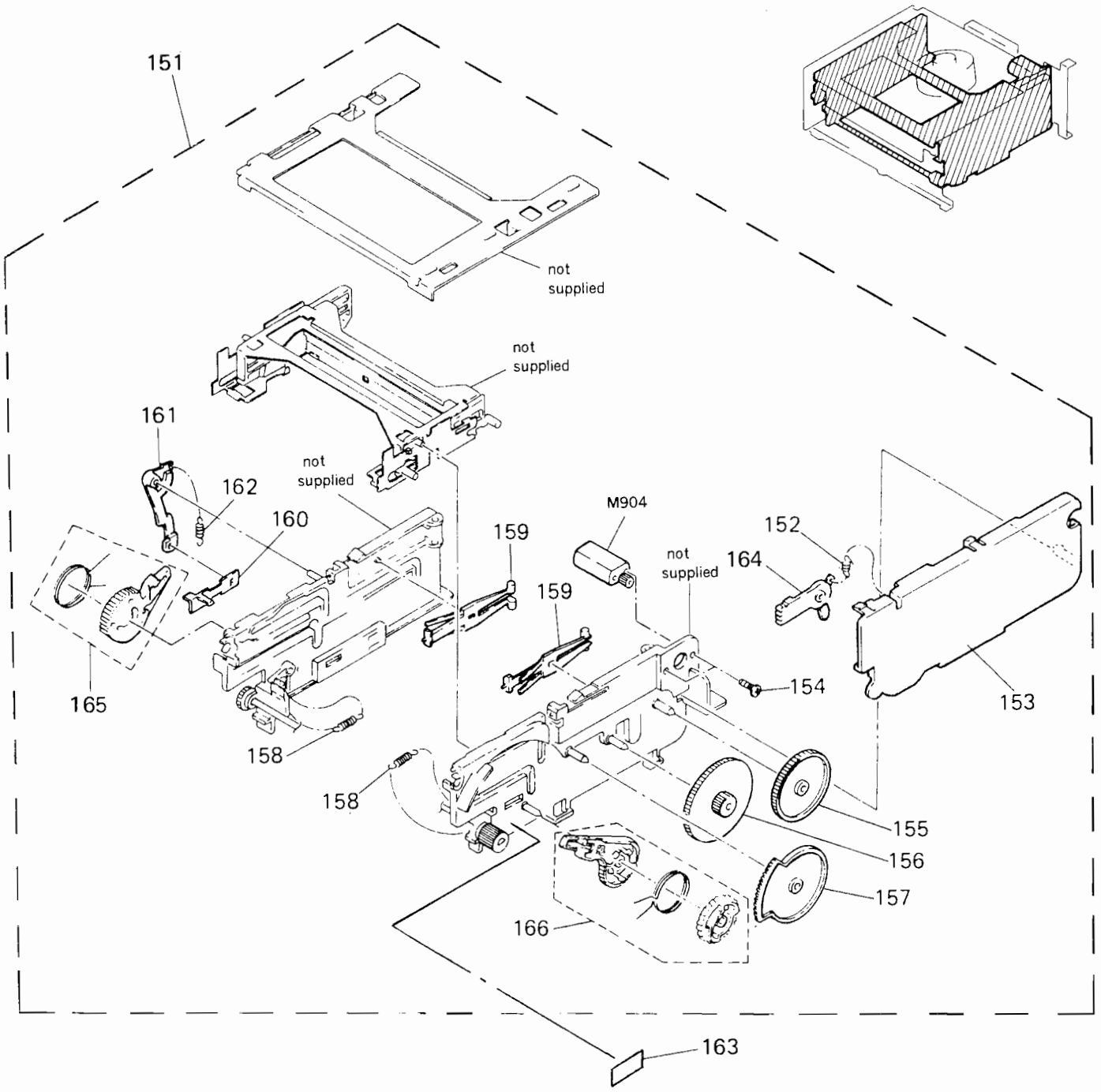

Ref. No.	Part No.	Description	Remark
* 151	A-7091-647-A	CASSETTE COMPARTMENT ASSY, FL	
152	3-731-175-02	SPRING, TENSION	
153	3-732-804-03	COVER, GEAR	
154	3-730-141-01	SCREW (PSW) (2X4)	
155	3-731-182-01	GEAR (B), DECELERATION	
156	3-731-181-01	GEAR (A), DECELERATION	
157	3-731-192-01	GEAR, MIDWAY	
158	3-731-176-02	SPRING, TENSION	
159	3-731-184-02	HOLDER LOCK	
160	3-731-189-01	SLIDER, LOCK	
161	3-731-188-01	ARM LOCK, DRIVING	
162	3-731-174-01	SPRING, TENSION	
* 163	3-730-176-11	SHEET, MD	
164	3-731-185-01	LINK, SWITCHING, DOOR	
165	X-3731-111-1	ARM (LEFT) ASSY, DRIVING	
166	X-3731-109-2	ARM (RIGHT) ASSY, DRIVING	
M904	X-3731-108-1	FL MOTOR ASSY	

6-5. MECHANICAL ASSEMBLY (1)

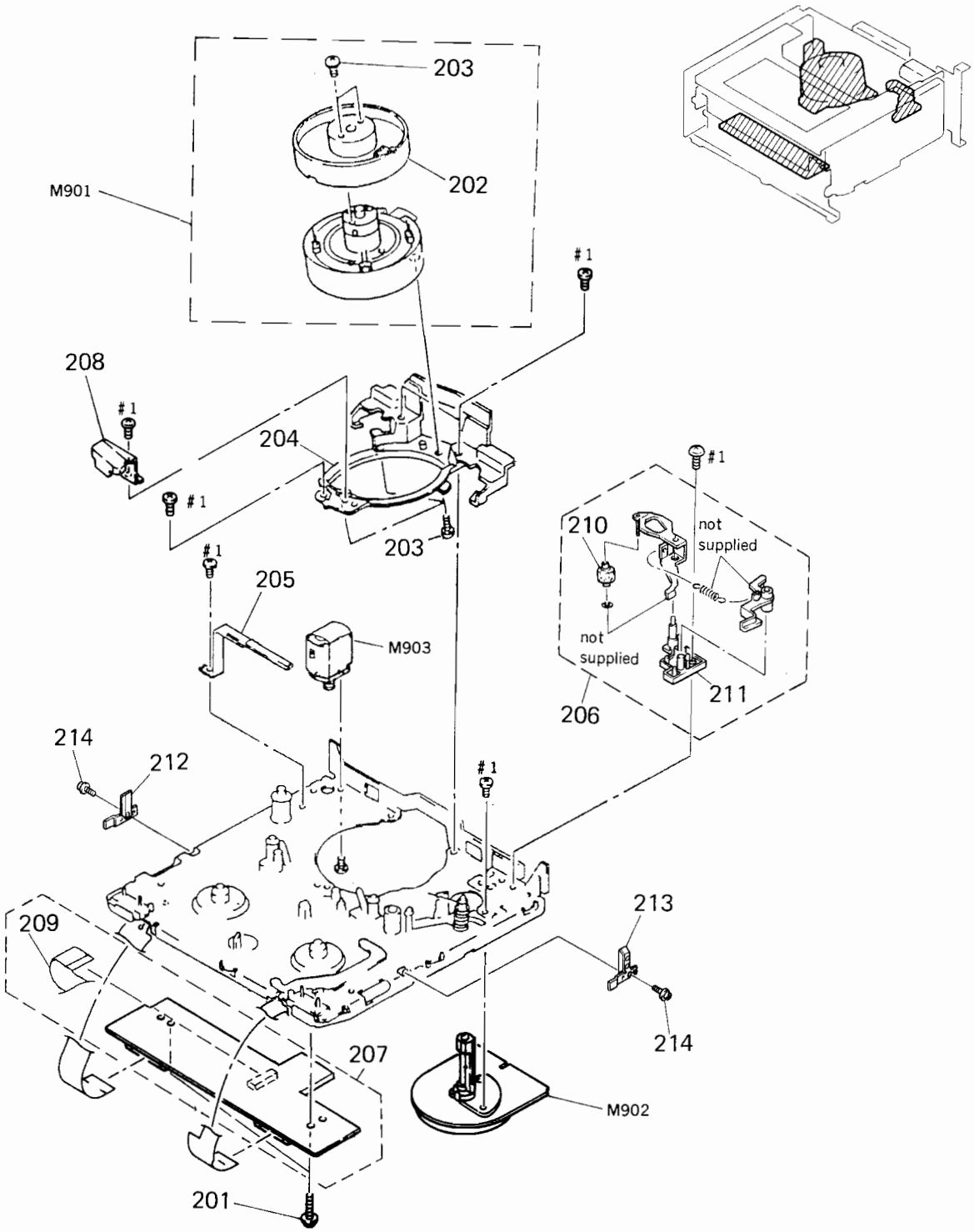

Ref. No.	Part No.	Description	Remark
201	3-713-790-21	SCREW (M2X6), TAPPING, P3	
202	A-7049-552-A	DRUM ASSY, ROTARY (UPPER) (DGR-63B-R)	
203	3-686-493-01	SCREW (M2X5), P1	
204	X-3686-482-5	BASE ASSY, DRUM	
205	X-3728-864-1	GROUND ASSY, SHAFT	
206	A-7040-207-A	ROLLER BLOCK ASSY, HC	
* 207	A-7063-182-A	UC-13 BOARD, COMPLETE	
208	3-728-868-01	GUARD, GUIDE	
209	1-690-804-11	CABLE, FLAT (FUS-2) 14P	

Ref. No.	Part No.	Description	Remark
210	X-3728-861-1	ROLLER ASSY, HC	
211	3-741-198-01	PLATE, HC	
212	X-3726-867-1	PRISM (LEFT) ASSY	
213	X-3726-866-1	PRISM (RIGHT) ASSY	
214	3-732-087-31	SCREW (M1.4X1.8), SPECIAL HEAD	
M901	A-7048-591-A	DRUM ASSY (DGU-63B-R)	
M902	8-835-331-31	MOTOR, DC U-22A (CAPSTAN)	
M903	A-7040-290-A	MOTOR ASSY, THREADING (LOADING)	

6-6. MECHANICAL ASSEMBLY (2)

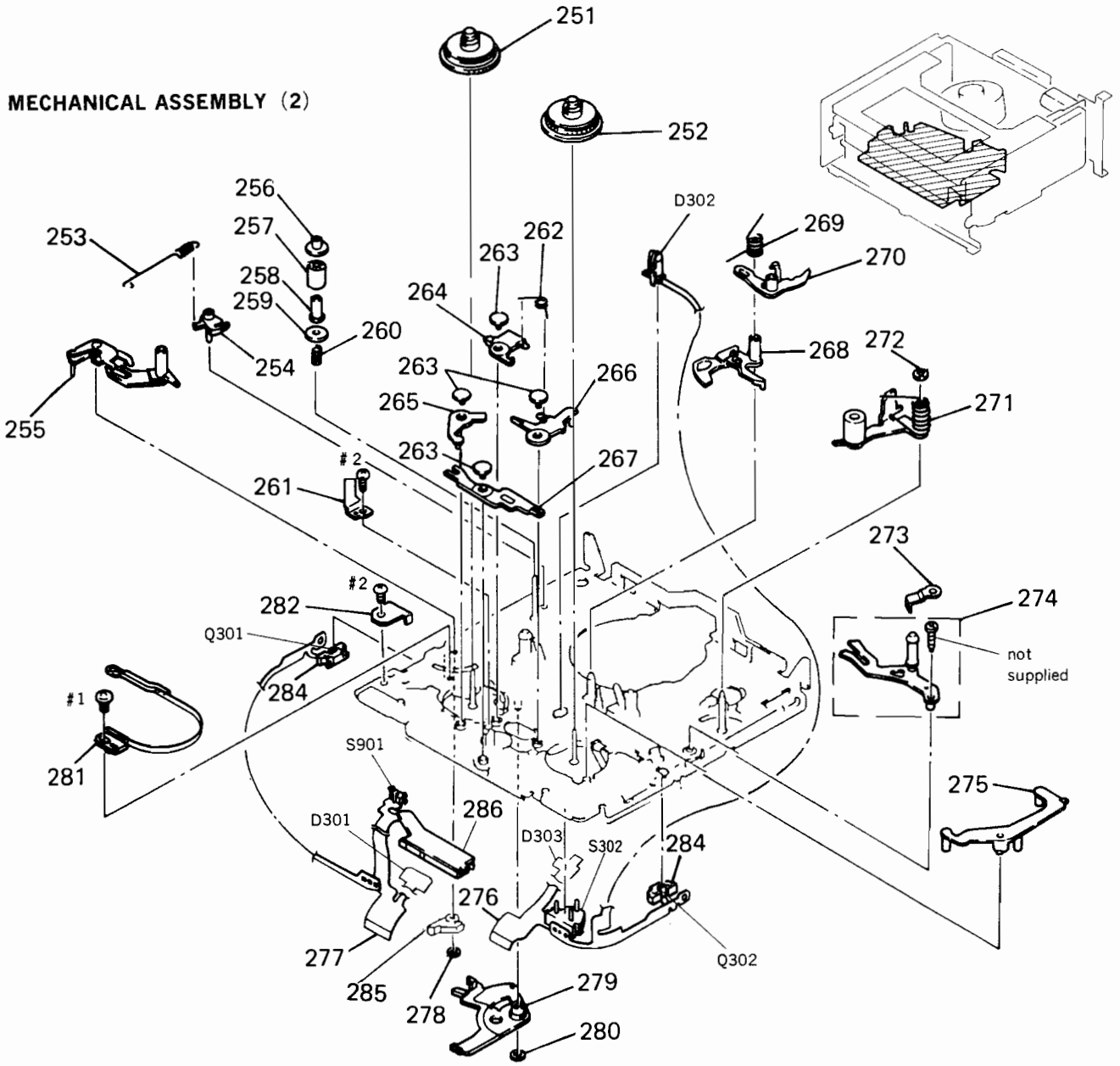

Ref. No.	Part No.	Description	Remark
251	X-3728-851-1	TABLE ASSY, REEL, S	
252	X-3728-855-6	TABLE ASSY, REEL, T	
253	3-736-414-01	SPRING, TENSION	
254	3-728-855-03	ARM, ADJUSTMENT	
255	X-3728-867-1	ARM ASSY (S), TENSION REGULATOR	
256	3-726-884-01	FLANGE, UPPER, TG2	
257	3-726-883-01	ROLLER, TG2	
258	3-726-885-01	SLEEVE, TG2	
259	3-726-882-02	FLANGE, LOWER, TG2	
260	3-726-886-01	SPRING, COMPRESSION	
261	3-726-848-01	RETAINER, TL	
262	3-726-866-01	SPRING (ST), TORSION	
263	3-726-858-01	PIN, SHAFT RETAINER	
264	3-728-849-01	BRAKE, S	
265	3-726-852-01	BRAKE, LB	
266	3-728-850-01	BRAKE, T	
267	3-726-853-01	LEVER, LB	
268	3-728-875-01	STOPPER, RK	
269	3-726-864-01	SPRING (RK), TORSION	
270	3-728-852-02	ARM, RK STOPPER	
271	A-7040-219-A	ARM BLOCK ASSY, PINCH	
272	3-669-465-00	WASHER (1.5), STOPPER	
273	3-728-808-01	SPRING, LEAF	
274	X-3728-869-1	ARM ASSY, TG7	
275	3-728-848-01	ARM, LB RELEASE	
276	1-628-061-12	FP-90 FLEXIBLE BOARD	
277	1-628-060-12	FP-89 FLEXIBLE BOARD	
278	3-321-393-11	WASHER, STOPPER	
279	X-3728-863-1	LEVER ASSY, SW	
280	3-726-829-01	WASHER, STOPPER	
281	X-3728-859-1	BAND ASSY, TENSION REGULATOR	
282	3-730-125-01	RETAINER, SW	
283	3-728-837-01	HOLDER, LED	
284	3-728-869-02	HOLDER, SENSOR	
285	X-3728-857-1	STOPPER ASSY, TENSION REGULATOR	
286	1-572-173-11	SWITCH, SLIDE (ENCODER)	
D301	8-719-820-44	DIODE TLP907-O(SONY2)	
D302	8-719-026-04	DIODE GL453JS	
D303	8-719-820-44	DIODE TLP907-O(SONY2)	
Q301	8-729-906-48	TRANSISTOR EE-TP109	
Q302	8-729-906-48	TRANSISTOR EE-TP109	
S302	1-572-298-11	SWITCH, PUSH	
S901	1-571-099-11	SWITCH	

6-7. MECHANICAL ASSEMBLY (3)

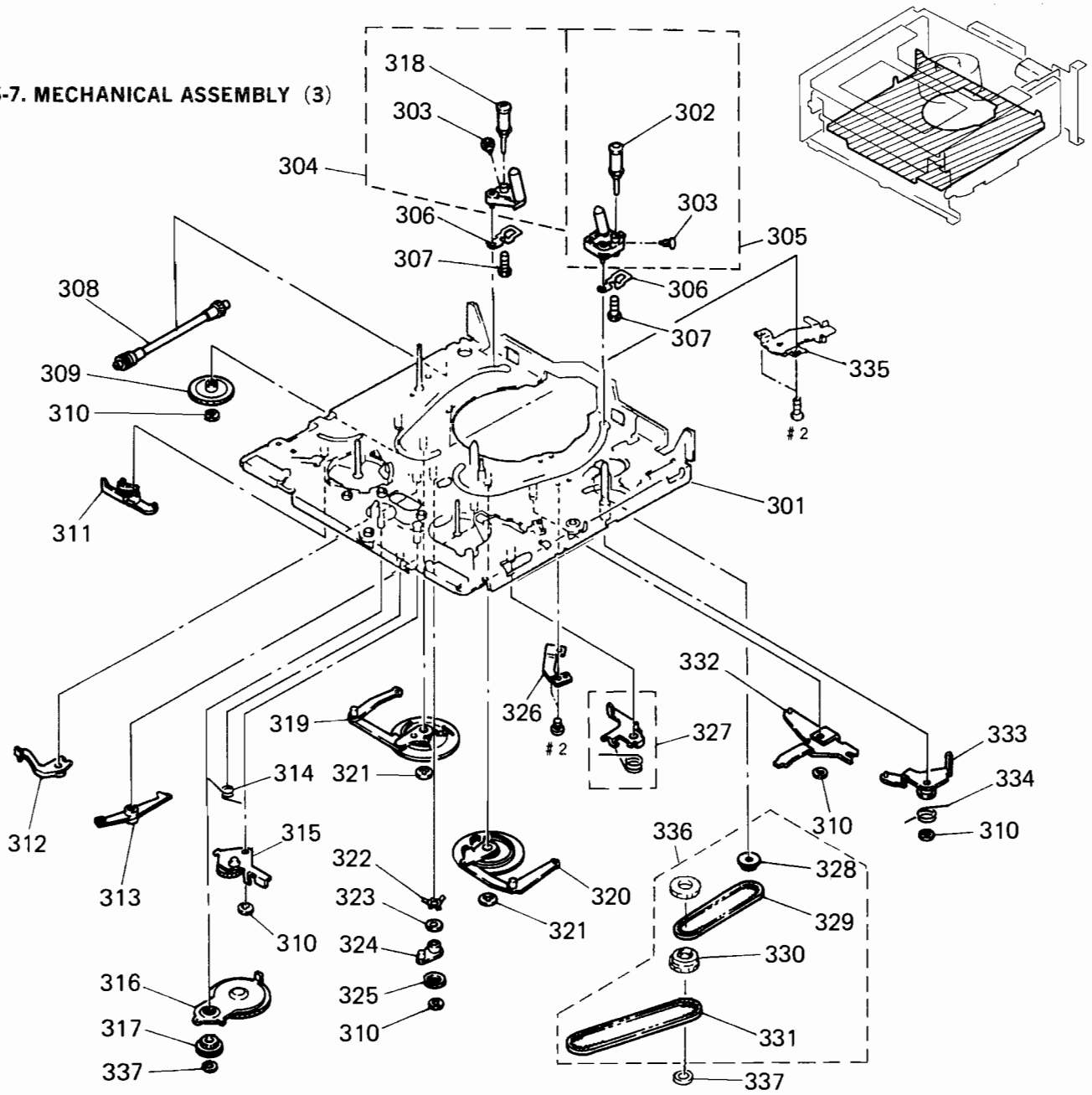

Ref. No.	Part No.	Description	Remark
301	X-3728-862-1	CHASSIS ASSY, MECHANICAL	
302	X-3728-808-4	ROLLER ASSY (U) (PLATING), GUIDE	
303	3-726-822-01	SCREW (M1.4X2) (STEP), HEAD	
304	A-7040-204-A	COASTER (LEFT) BLOCK ASSY	
305	A-7040-216-A	COASTER (RIGHT) BLOCK ASSY (M1P)	
306	3-736-485-01	SPRING, LEAF, COSTER	
307	3-726-830-01	SCREW (M1.4X4) (THREE LOCK)	
308	X-3940-276-2	WORM ASSY	
309	3-744-109-01	GEAR, WHEEL	
310	3-726-829-01	WASHER, STOPPER	
311	3-728-842-01	LEVER, EJECT	
312	3-728-851-01	BRAKE, UL	
313	3-726-854-01	ARM, BRAKE RELEASE	
314	3-726-865-01	SPRING (LB), TORSION	
315	A-7040-225-A	GEAR BLOCK ASSY (N), LB	
316	X-3728-866-1	GEAR ASSY, RK	
317	X-3728-858-2	GEAR ASSY, RC	
318	X-3726-879-4	ROLLER ASSY ((U)-NB), GUIDE	
319	X-3728-842-1	GEAR (LEFT) ASSY, DRIVE	

Ref. No.	Part No.	Description	Remark
320	X-3728-843-1	GEAR (RIGHT) ASSY, DRIVE	
321	3-669-465-00	WASHER (1.5), STOPPER	
322	3-726-867-01	SPRING, LEAF	
323	3-701-436-21	WASHER, POLYEHTHYLENE	
324	3-726-857-03	ARM, UL	
325	3-726-856-04	GEAR, UL	
* 326	3-726-805-01	REINFORCEMENT (TT)	
327	X-3726-808-3	BRAKE ASSY, TS	
328	X-3726-805-1	GEAR ASSY, JOINT	
329	3-728-866-11	BELT (S), TIMING	
330	3-741-196-02	PULLEY (LOWER), BELT MIDWAY	
331	3-741-197-01	BELT (L), TIMING	
332	3-941-322-01	LEVER, LOADING	
333	X-3940-279-1	ARM ASSY, PINCH SUB	
334	3-726-895-01	SPRING	
335	X-3940-278-1	REINFORCEMENT (SS) ASSY	
336	X-3726-813-4	PULLEY (UPPER) ASSY, MIDWAY	
337	3-321-393-11	WASHER, STOPPER	

AU-123

SECTION 7
ELECTRICAL PARTS LIST

NOTE:
- Due to standardization, replacements in the parts list may be different from the parts specified in the diagrams or the components used on the set.
- -XX and -X mean standardized parts, so they may have some difference from the original one.
- RESISTORS
  All resistors are in ohms.
  METAL:Metal-film resistor.
  METAL OXIDE: Metal oxide-film resistor.
  F:nonflammable
- Items marked "*" are not stocked since they are seldom required for routine service. Some delay should be anticipated when ordering these items.
- SEMICONDUCTORS
  In each case, u:μ, for example:
  uA..: μA.. uPA..: μPA..
  uPB..: μPB.. uPC..: μPC.. uPD..: μPD..
- CAPACITORS
  uF: μF
- COILS
  uH: μH

The components identified by mark ⚠ or dotted line with mark. ⚠ are critical for safety. Replace only with part number specified.

When indicating parts by reference number, please include the board.

Ref. No.	Part No.	Description			Remark
*	A-7063-206-A	AU-123 BOARD, COMPLETE			
		**********			
		(Ref. No. 4000 series)			
		< CAPACITOR >			
C510	1-163-038-00	CERAMIC CHIP	0.1uF		25V
C511	1-163-125-00	CERAMIC CHIP	220PF	5%	50V
C512	1-163-009-11	CERAMIC CHIP	0.001uF	10%	50V
C513	1-163-031-11	CERAMIC CHIP	0.01uF		50V
C515	1-164-004-11	CERAMIC CHIP	0.1uF	10%	25V
C516	1-164-004-11	CERAMIC CHIP	0.1uF	10%	25V
C517	1-164-004-11	CERAMIC CHIP	0.1uF	10%	25V
C518	1-126-157-11	ELECT	10uF	20%	16V
C521	1-163-038-00	CERAMIC CHIP	0.1uF		25V
C524	1-163-031-11	CERAMIC CHIP	0.01uF		50V
C525	1-163-031-11	CERAMIC CHIP	0.01uF		50V
C526	1-163-011-11	CERAMIC CHIP	0.0015uF	10%	50V
C527	1-126-163-11	ELECT	4.7uF	20%	50V
C528	1-126-163-11	ELECT	4.7uF	20%	50V
C529	1-163-121-00	CERAMIC CHIP	150PF	5%	50V
C530	1-126-157-11	ELECT	10uF	20%	16V
C531	1-164-004-11	CERAMIC CHIP	0.1uF	10%	25V
C532	1-163-986-00	CERAMIC CHIP	0.027uF	10%	25V
C533	1-163-038-00	CERAMIC CHIP	0.1uF		25V
C534	1-163-117-00	CERAMIC CHIP	100PF	5%	50V
C535	1-163-014-00	CERAMIC CHIP	0.0027uF	10%	50V
C536	1-163-009-11	CERAMIC CHIP	0.001uF	10%	50V
C591	1-163-038-00	CERAMIC CHIP	0.1uF		25V
C592	1-163-038-00	CERAMIC CHIP	0.1uF		25V
C901	1-126-157-11	ELECT	10uF	20%	16V
C902	1-163-031-11	CERAMIC CHIP	0.01uF		50V
C903	1-124-257-00	ELECT	2.2uF	20%	50V
C904	1-126-157-11	ELECT	10uF	20%	16V
C905	1-126-163-11	ELECT	4.7uF	20%	50V
C906	1-163-017-00	CERAMIC CHIP	0.0047uF	5%	50V
C907	1-126-154-11	ELECT	47uF	20%	6.3V
C908	1-126-163-11	ELECT	4.7uF	20%	50V
C909	1-163-017-00	CERAMIC CHIP	0.0047uF	5%	50V
C910	1-163-017-00	CERAMIC CHIP	0.0047uF	5%	50V
C911	1-126-163-11	ELECT	4.7uF	20%	50V
C913	1-126-157-11	ELECT	10uF	20%	16V
C914	1-124-229-00	ELECT	33uF	20%	10V
C916	1-126-154-11	ELECT	47uF	20%	6.3V
C918	1-124-638-11	ELECT	22uF	20%	10V
C919	1-124-589-11	ELECT	47uF	20%	16V
C920	1-163-031-11	CERAMIC CHIP	0.01uF		50V
C922	1-124-638-11	ELECT	22uF	20%	10V
C924	1-163-031-11	CERAMIC CHIP	0.01uF		50V
C928	1-126-163-11	ELECT	4.7uF	20%	50V
C929	1-163-017-00	CERAMIC CHIP	0.0047uF	5%	50V
C930	1-163-017-00	CERAMIC CHIP	0.0047uF	5%	50V
C931	1-126-163-11	ELECT	4.7uF	20%	50V
C932	1-126-154-11	ELECT	47uF	20%	6.3V
C933	1-126-163-11	ELECT	4.7uF	20%	50V
C934	1-163-017-00	CERAMIC CHIP	0.0047uF	5%	50V
C935	1-126-157-11	ELECT	10uF	20%	16V
C936	1-124-257-00	ELECT	2.2uF	20%	50V
C937	1-163-031-11	CERAMIC CHIP	0.01uF		50V
C938	1-126-157-11	ELECT	10uF	20%	16V
C939	1-163-031-11	CERAMIC CHIP	0.01uF		50V
C940	1-163-031-11	CERAMIC CHIP	0.01uF		50V
C943	1-163-038-00	CERAMIC CHIP	0.1uF		25V
C944	1-163-038-00	CERAMIC CHIP	0.1uF		25V
C945	1-164-232-11	CERAMIC CHIP	0.01uF		50V
C946	1-163-809-11	CERAMIC CHIP	0.047uF	10%	25V
C947	1-163-003-11	CERAMIC CHIP	330PF	10%	50V
C948	1-126-301-11	ELECT	1uF	20%	50V
C949	1-164-232-11	CERAMIC CHIP	0.01uF		50V
C950	1-163-031-11	CERAMIC CHIP	0.01uF		50V
C951	1-163-031-11	CERAMIC CHIP	0.01uF		50V
C952	1-163-031-11	CERAMIC CHIP	0.01uF		50V
C953	1-163-031-11	CERAMIC CHIP	0.01uF		50V
C954	1-163-031-11	CERAMIC CHIP	0.01uF		50V
C955	1-163-031-11	CERAMIC CHIP	0.01uF		50V
C956	1-163-031-11	CERAMIC CHIP	0.01uF		50V
C957	1-163-031-11	CERAMIC CHIP	0.01uF		50V
C959	1-163-019-00	CERAMIC CHIP	0.0068uF	10%	50V
C960	1-164-232-11	CERAMIC CHIP	0.01uF		50V
C961	1-124-638-11	ELECT	22uF	20%	10V
C962	1-124-638-11	ELECT	22uF	20%	10V

Ref. No.	Part No.	Description			Remark
C963	1-163-038-00	CERAMIC CHIP	0.1uF		25V
C964	1-124-638-11	ELECT	22uF	20%	10V
C965	1-124-638-11	ELECT	22uF	20%	10V
C966	1-163-035-00	CERAMIC CHIP	0.047uF		50V
C969	1-163-031-11	CERAMIC CHIP	0.01uF		50V
C970	1-163-031-11	CERAMIC CHIP	0.01uF		50V
C972	1-163-031-11	CERAMIC CHIP	0.01uF		50V
C973	1-163-031-11	CERAMIC CHIP	0.01uF		50V
C974	1-163-031-11	CERAMIC CHIP	0.01uF		50V
C975	1-163-031-11	CERAMIC CHIP	0.01uF		50V
C976	1-163-035-00	CERAMIC CHIP	0.047uF		50V
C977	1-126-154-11	ELECT	47uF	20%	6.3V
C980	1-163-035-00	CERAMIC CHIP	0.047uF		50V
C983	1-126-301-11	ELECT	1uF	20%	50V
C984	1-126-301-11	ELECT	1uF	20%	50V
C985	1-163-117-00	CERAMIC CHIP	100PF	5%	50V
C990	1-163-117-00	CERAMIC CHIP	100PF	5%	50V
C991	1-163-031-11	CERAMIC CHIP	0.01uF		50V
C992	1-163-031-11	CERAMIC CHIP	0.01uF		50V
C993	1-163-031-11	CERAMIC CHIP	0.01uF		50V
C994	1-163-031-11	CERAMIC CHIP	0.01uF		50V
C995	1-163-031-11	CERAMIC CHIP	0.01uF		50V
C996	1-126-301-11	ELECT	1uF	20%	50V
		< CONNECTOR >			
* CN901	1-695-101-11	SOCKET, CONNECTOR 12P			
* CN902	1-562-638-11	SOCKET, CONNECTOR 8P			
		< DIODE >			
D503	8-719-800-76	DIODE	1SS226		
D504	8-719-404-46	DIODE	MA110		
D505	8-719-404-46	DIODE	MA110		
		< FILTER >			
FL901	1-236-837-21	FILTER, BAND PASS			
FL902	1-236-838-21	FILTER, BAND PASS			
		< IC >			
IC501	8-759-100-93	IC	uPC393G2		
IC502	8-759-009-51	IC	MC14538BF		
IC901	8-759-077-11	IC	CXA1542Q		
IC902	8-752-334-42	IC	CXD2106Q		
		< COIL >			
L501	1-408-948-00	INDUCTOR	220uH		
L903	1-407-169-XX	INDUCTOR	100uH		

Ref. No.	Part No.	Description			Remark
		< TRANSISTOR >			
Q507	8-729-402-19	TRANSISTOR	XN6501		
Q508	8-729-402-13	TRANSISTOR	XN1501		
Q509	8-729-422-36	TRANSISTOR	2SB709A-Q		
Q510	8-729-403-07	TRANSISTOR	XN1213		
Q511	8-729-402-19	TRANSISTOR	XN6501		
Q512	8-729-422-27	TRANSISTOR	2SD601A-Q		
Q513	8-729-403-07	TRANSISTOR	XN1213		
Q514	8-729-421-90	TRANSISTOR	XN4113		
Q515	8-729-403-07	TRANSISTOR	XN1213		
Q516	8-729-421-19	TRANSISTOR	UN2213		
Q517	8-729-402-19	TRANSISTOR	XN6501		
Q901	8-729-402-19	TRANSISTOR	XN6501		
Q902	8-729-422-27	TRANSISTOR	2SD601A-Q		
Q903	8-729-402-19	TRANSISTOR	XN6501		
Q904	8-729-422-27	TRANSISTOR	2SD601A-Q		
Q909	8-729-922-87	TRANSISTOR	2SD1757K-RS		
Q910	8-729-922-87	TRANSISTOR	2SD1757K-RS		
Q911	8-729-421-19	TRANSISTOR	UN2213		
Q914	8-729-424-18	TRANSISTOR	UN2113		
Q915	8-729-402-19	TRANSISTOR	XN6501		
Q916	8-729-402-19	TRANSISTOR	XN6501		
Q917	8-729-403-07	TRANSISTOR	XN1213		
		< RESISTOR >			
R501	1-216-295-00	METAL CHIP	0	5%	1/10W
R502	1-216-059-00	METAL CHIP	2.7K	5%	1/10W
R504	1-216-105-00	METAL CHIP	220K	5%	1/10W
R505	1-216-295-00	METAL CHIP	0	5%	1/10W
R516	1-216-089-00	METAL CHIP	47K	5%	1/10W
R517	1-216-085-00	METAL CHIP	33K	5%	1/10W
R518	1-216-081-00	METAL CHIP	22K	5%	1/10W
R519	1-216-067-00	METAL CHIP	5.6K	5%	1/10W
R520	1-216-097-00	METAL CHIP	100K	5%	1/10W
R521	1-216-073-00	METAL CHIP	10K	5%	1/10W
R522	1-216-073-00	METAL CHIP	10K	5%	1/10W
R523	1-216-059-00	METAL CHIP	2.7K	5%	1/10W
R524	1-216-063-00	METAL CHIP	3.9K	5%	1/10W
R525	1-216-071-00	METAL CHIP	8.2K	5%	1/10W
R526	1-216-085-00	METAL CHIP	33K	5%	1/10W
R527	1-216-097-00	METAL CHIP	100K	5%	1/10W
R528	1-216-085-00	METAL CHIP	33K	5%	1/10W
R529	1-216-089-00	METAL CHIP	47K	5%	1/10W
R532	1-216-049-00	METAL CHIP	1K	5%	1/10W
R533	1-216-041-00	METAL CHIP	470	5%	1/10W
R534	1-216-057-00	METAL CHIP	2.2K	5%	1/10W
R535	1-216-073-00	METAL CHIP	10K	5%	1/10W
R536	1-216-069-00	METAL CHIP	6.8K	5%	1/10W

Ref.No.	Part No.	Description			Remark
R537	1-216-113-00	METAL CHIP	470K	5%	1/10W
R538	1-216-057-00	METAL CHIP	2.2K	5%	1/10W
R539	1-216-097-00	METAL CHIP	100K	5%	1/10W
R540	1-216-073-00	METAL CHIP	10K	5%	1/10W
R541	1-216-073-00	METAL CHIP	10K	5%	1/10W
R542	1-216-057-00	METAL CHIP	2.2K	5%	1/10W
R543	1-216-089-00	METAL CHIP	47K	5%	1/10W
R544	1-216-057-00	METAL CHIP	2.2K	5%	1/10W
R545	1-216-089-00	METAL CHIP	47K	5%	1/10W
R546	1-216-089-00	METAL CHIP	47K	5%	1/10W
R547	1-216-677-11	METAL CHIP	12K	0.5%	1/10W
R548	1-216-105-00	METAL CHIP	220K	5%	1/10W
R549	1-216-085-00	METAL CHIP	33K	5%	1/10W
R550	1-216-057-00	METAL CHIP	2.2K	5%	1/10W
R551	1-216-049-00	METAL CHIP	1K	5%	1/10W
R552	1-216-689-11	METAL CHIP	39K	0.5%	1/10W
R554	1-216-295-00	METAL CHIP	0	5%	1/10W
R591	1-216-073-00	METAL CHIP	10K	5%	1/10W
R592	1-216-073-00	METAL CHIP	10K	5%	1/10W
R594	1-216-049-00	METAL CHIP	1K	5%	1/10W
R901	1-216-073-00	METAL CHIP	10K	5%	1/10W
R902	1-216-067-00	METAL CHIP	5.6K	5%	1/10W
R903	1-216-091-00	METAL CHIP	56K	5%	1/10W
R904	1-216-083-00	METAL CHIP	27K	5%	1/10W
R907	1-216-121-00	METAL CHIP	1M	5%	1/10W
R908	1-216-075-00	METAL CHIP	12K	5%	1/10W
R912	1-216-033-00	METAL CHIP	220	5%	1/10W
R913	1-216-033-00	METAL CHIP	220	5%	1/10W
R919	1-216-091-00	METAL CHIP	56K	5%	1/10W
R920	1-216-083-00	METAL CHIP	27K	5%	1/10W
R921	1-216-097-00	METAL CHIP	100K	5%	1/10W
R922	1-216-295-00	METAL CHIP	0	5%	1/10W
R923	1-216-073-00	METAL CHIP	10K	5%	1/10W
R924	1-216-067-00	METAL CHIP	5.6K	5%	1/10W
R925	1-216-077-00	METAL CHIP	15K	5%	1/10W
R926	1-216-069-00	METAL CHIP	6.8K	5%	1/10W
R927	1-216-295-00	METAL CHIP	0	5%	1/10W
R929	1-216-085-00	METAL CHIP	33K	5%	1/10W
R930	1-216-295-00	METAL CHIP	0	5%	1/10W
R932	1-216-077-00	METAL CHIP	15K	5%	1/10W
R933	1-216-071-00	METAL CHIP	8.2K	5%	1/10W
R934	1-216-065-00	METAL CHIP	4.7K	5%	1/10W
R935	1-216-059-00	METAL CHIP	2.7K	5%	1/10W
R936	1-216-081-00	METAL CHIP	22K	5%	1/10W
R937	1-216-079-00	METAL CHIP	18K	5%	1/10W
R938	1-216-061-00	METAL CHIP	3.3K	5%	1/10W
R939	1-216-053-00	METAL CHIP	1.5K	5%	1/10W
R940	1-216-061-00	METAL CHIP	3.3K	5%	1/10W
R941	1-216-073-00	METAL CHIP	10K	5%	1/10W
R942	1-216-073-00	METAL CHIP	10K	5%	1/10W
R943	1-216-041-00	METAL CHIP	470	5%	1/10W
R947	1-216-049-00	METAL CHIP	1K	5%	1/10W
R948	1-216-049-00	METAL CHIP	1K	5%	1/10W
R949	1-216-049-00	METAL CHIP	1K	5%	1/10W
R950	1-216-049-00	METAL CHIP	1K	5%	1/10W
R951	1-216-075-00	METAL CHIP	12K	5%	1/10W
R952	1-216-085-00	METAL CHIP	33K	5%	1/10W
R953	1-216-075-00	METAL CHIP	12K	5%	1/10W
R954	1-216-097-00	METAL CHIP	100K	5%	1/10W
R955	1-216-097-00	METAL CHIP	100K	5%	1/10W
R958	1-216-065-00	METAL CHIP	4.7K	5%	1/10W
R959	1-216-105-00	METAL CHIP	220K	5%	1/10W
R960	1-216-049-00	METAL CHIP	1K	5%	1/10W
R964	1-216-295-00	METAL CHIP	0	5%	1/10W
R965	1-216-295-00	METAL CHIP	0	5%	1/10W
R967	1-216-057-00	METAL CHIP	2.2K	5%	1/10W
R968	1-216-103-00	METAL CHIP	180K	5%	1/10W
R969	1-216-057-00	METAL CHIP	2.2K	5%	1/10W
R970	1-216-057-00	METAL CHIP	2.2K	5%	1/10W
R971	1-216-103-00	METAL CHIP	180K	5%	1/10W
R972	1-216-057-00	METAL CHIP	2.2K	5%	1/10W
R973	1-216-097-00	METAL CHIP	100K	5%	1/10W
R974	1-216-097-00	METAL CHIP	100K	5%	1/10W
R975	1-216-097-00	METAL CHIP	100K	5%	1/10W
R976	1-216-097-00	METAL CHIP	100K	5%	1/10W
R977	1-216-073-00	METAL CHIP	10K	5%	1/10W
R978	1-216-073-00	METAL CHIP	10K	5%	1/10W
R983	1-216-057-00	METAL CHIP	2.2K	5%	1/10W
R987	1-216-295-00	METAL CHIP	0	5%	1/10W
R988	1-216-295-00	METAL CHIP	0	5%	1/10W
R989	1-216-083-00	METAL CHIP	27K	5%	1/10W
R990	1-216-083-00	METAL CHIP	27K	5%	1/10W
R991	1-216-073-00	METAL CHIP	10K	5%	1/10W
R992	1-216-073-00	METAL CHIP	10K	5%	1/10W
R993	1-216-061-00	METAL CHIP	3.3K	5%	1/10W
R994	1-216-061-00	METAL CHIP	3.3K	5%	1/10W
R995	1-216-047-00	METAL CHIP	820	5%	1/10W
R996	1-216-047-00	METAL CHIP	820	5%	1/10W
R997	1-216-049-00	METAL CHIP	1K	5%	1/10W
R998	1-216-049-00	METAL CHIP	1K	5%	1/10W

< VARIABLE RESISTOR >

RV901	1-238-091-11	RES, ADJ, CERMET	22K	
RV902	1-238-091-11	RES, ADJ, CERMET	22K	

****

Ref. No.	Part No.	Description	Remark
	A-7063-089-A	CC-71 BOARD, COMPLETE	
		**********	
		(Ref. No. 2000 series)	
	1-690-805-11	CABLE, FLAT (FCS-3) 15P	
		< CONNECTOR >	
* CN701	1-562-880-21	CONNECOTR, CARD EDGE 15P	
CN702	1-566-547-11	CONNECTOR, FPC (NON ZIF) 15P	
**********			
	1-628-060-12	FP-89 FLEXIBLE BOARD	
		**********	
		(Ref. No. 2000 series)	
	3-728-869-02	HOLDER SENSOR	
		< DIODE >	
D301	8-719-820-44	DIODE TLP907-0 (SONY2)	
		< TRANSISTOR >	
Q301	8-729-906-48	TRANSISTOR EE-TP109	
		< SWITCH >	
S301	1-572-173-11	SWITCH SLIDE (ENCODER)	
S303	1-571-099-11	SWITCH (CC DOWN)	
**********			
	1-628-061-12	FP-90 FLEXIBLE BOARD	
		**********	
		(Ref. No. 2000 series)	
	3-728-869-02	HOLDER SENSOR	
		< DIODE >	
D302	8-719-026-04	DIODE GL-453JS (including LED HOLDER)	
D303	8-719-820-41	DIODE TLP907-0 (SONY2)	
		< TRANSISTOR >	
Q302	8-729-906-48	TRANSISTOR EE-TP109	
		< SWITCH >	
S302	1-572-298-11	SWITCH PUSH (REC PROOF/TAPE SELECT)	
**********			

Ref. No.	Part No.	Description	Remark
*	A-7063-202-A	FT-73 BOARD, COMPLETE	
		**********	
		(Ref. No. 5000 series)	
	1-690-799-11	CABLE, FLAT (FFT-3) 18P	
	1-696-411-12	CABLE, FLAT (FFT-8)	
*	3-948-364-01	HOLDER (CX), INDICATION TUBE	
*	3-948-365-01	ILLUMINATOR (CX)	
		< CAPACITOR >	
C201	1-163-031-11	CERAMIC CHIP 0.01uF	50V
C202	1-163-059-00	CERAMIC CHIP 0.01uF 10%	50V
		< CONNECTOR >	
* CN201	1-691-050-21	HOUSING, CONNECTOR 18P	
* CN202	1-691-050-21	HOUSING, CONNECTOR 18P	
		< DIODE >	
D201	8-719-951-35	DIODE SLV-31MC3	
D202	8-719-951-35	DIODE SLV-31MC3	
D203	8-719-951-35	DIODE SLV-31MC3	
D204	8-719-951-35	DIODE SLV-31MC3	
D205	8-719-951-35	DIODE SLV-31MC3	
D206	8-719-951-35	DIODE SLV-31MC3	
D207	8-719-812-32	LED TLY123 (SUB/R)	
D208	8-719-812-32	LED TLY123 (VOICE BOOST)	
D209	8-719-946-30	LED SLR34DC3 (▮▮)	
D210	8-719-940-99	LED SLR-34VC3 (REC)	
D211	8-719-940-82	LED SLR-34MC3 (POWER)	
D212	8-719-940-99	LED SLR-34VC3 (STANDBY)	
D213	8-719-812-32	LED TLY123 (MAIN/L)	
D214	8-719-946-30	LED SLR-34DC3 (EDIT)	
D215	8-719-940-82	LED SLR-34MC3 (◁)	
D216	8-719-940-82	LED SLR-34MC3 (▷)	
D217	8-719-940-99	LED SLR-34VC3 (STEREO)	
D218	8-719-946-30	LED SLR-34DC3 (SYNCHRO EDIT)	
D219	8-719-812-32	LED TLY123 (◁◁)	
D220	8-719-812-32	LED TLY123 (▷▷)	
		< SWITCH >	
DMS201	1-572-662-21	SWITCH, ROTARY (PLAY, STOP)	
		< IC >	
IC201	8-741-100-47	IC SBX1610-09	
IC202	8-759-009-22	IC MC14094BF	
		< FLUORESCENT INDICATOR >	
ND201	1-809-727-11	DISPLAY PANEL, LIQUID CRYSTAL	

FT-73

Ref.No.	Part No.	Description			Remark
		< TRANSISTOR >			
Q201	8-729-421-19	TRANSISTOR	UN2213		
Q202	8-729-421-19	TRANSISTOR	UN2213		
Q203	8-729-421-19	TRANSISTOR	UN2213		
Q204	8-729-421-19	TRANSISTOR	UN2213		
Q205	8-729-421-19	TRANSISTOR	UN2213		
Q206	8-729-421-19	TRANSISTOR	UN2213		
Q207	8-729-421-19	TRANSISTOR	UN2213		
Q208	8-729-421-19	TRANSISTOR	UN2213		
		< RESISTOR >			
R201	1-216-206-00	METAL GLAZE	2.2K	5%	1/8W
R202	1-216-206-00	METAL GLAZE	2.2K	5%	1/8W
R203	1-216-061-00	METAL CHIP	3.3K	5%	1/10W
R204	1-216-057-00	METAL CHIP	2.2K	5%	1/10W
R205	1-216-206-00	METAL GLAZE	2.2K	5%	1/8W
R206	1-216-061-00	METAL CHIP	3.3K	5%	1/10W
R207	1-216-065-00	METAL CHIP	4.7K	5%	1/10W
R208	1-216-033-00	METAL CHIP	220	5%	1/10W
R209	1-216-017-00	METAL CHIP	47	5%	1/10W
R210	1-216-017-00	METAL CHIP	47	5%	1/10W
R211	1-216-206-00	METAL GLAZE	2.2K	5%	1/8W
R212	1-216-057-00	METAL CHIP	2.2K	5%	1/10W
R213	1-216-210-00	METAL GLAZE	3.3K	5%	1/8W
R214	1-216-065-00	METAL CHIP	4.7K	5%	1/10W
R215	1-216-031-00	METAL CHIP	180	5%	1/10W
R216	1-216-033-00	METAL CHIP	220	5%	1/10W
R217	1-216-033-00	METAL CHIP	220	5%	1/10W
R218	1-216-182-00	METAL GLAZE	220	5%	1/8W
R219	1-216-033-00	METAL CHIP	220	5%	1/10W
R220	1-216-178-00	METAL GLAZE	150	5%	1/8W
R221	1-216-033-00	METAL CHIP	220	5%	1/10W
R222	1-216-033-00	METAL CHIP	220	5%	1/10W
R223	1-216-033-00	METAL CHIP	220	5%	1/10W
R224	1-216-033-00	METAL CHIP	220	5%	1/10W
R225	1-216-033-00	METAL CHIP	220	5%	1/10W
R226	1-216-033-00	METAL CHIP	220	5%	1/10W
R227	1-216-033-00	METAL CHIP	220	5%	1/10W
R228	1-216-033-00	METAL CHIP	220	5%	1/10W
R230	1-216-037-00	METAL CHIP	330	5%	1/10W
		< JUMPER RESISTOR >			
RJ201	1-216-296-00	METAL CHIP	0	5%	1/8W
RJ202	1-216-296-00	METAL CHIP	0	5%	1/8W
RJ203	1-216-296-00	METAL CHIP	0	5%	1/8W
RJ204	1-216-295-00	METAL CHIP	0	5%	1/10W
RJ205	1-216-296-00	METAL CHIP	0	5%	1/8W
RJ206	1-216-296-00	METAL CHIP	0	5%	1/8W

Ref.No.	Part No.	Description			Remark
RJ207	1-216-296-00	METAL CHIP	0	5%	1/8W
RJ208	1-216-296-00	METAL CHIP	0	5%	1/8W
RJ209	1-216-296-00	METAL CHIP	0	5%	1/8W
RJ210	1-216-295-00	METAL CHIP	0	5%	1/10W
RJ211	1-216-296-00	METAL CHIP	0	5%	1/8W
RJ212	1-216-295-00	METAL CHIP	0	5%	1/10W
RJ213	1-216-296-00	METAL CHIP	0	5%	1/8W
RJ214	1-216-296-00	METAL CHIP	0	5%	1/8W
RJ215	1-216-296-00	METAL CHIP	0	5%	1/8W
RJ216	1-216-296-00	METAL CHIP	0	5%	1/8W
RJ217	1-216-296-00	METAL CHIP	0	5%	1/8W
RJ218	1-216-296-00	METAL CHIP	0	5%	1/8W
RJ219	1-216-296-00	METAL CHIP	0	5%	1/8W
RJ220	1-216-296-00	METAL CHIP	0	5%	1/8W
RJ221	1-216-295-00	METAL CHIP	0	5%	1/10W
RJ222	1-216-296-00	METAL CHIP	0	5%	1/8W
RJ223	1-216-296-00	METAL CHIP	0	5%	1/8W
RJ224	1-216-296-00	METAL CHIP	0	5%	1/8W
RJ225	1-216-296-00	METAL CHIP	0	5%	1/8W
RJ226	1-216-295-00	METAL CHIP	0	5%	1/10W
RJ227	1-216-296-00	METAL CHIP	0	5%	1/8W
RJ228	1-216-296-00	METAL CHIP	0	5%	1/8W
RJ229	1-216-296-00	METAL CHIP	0	5%	1/8W
RJ230	1-216-296-00	METAL CHIP	0	5%	1/8W
RJ231	1-216-296-00	METAL CHIP	0	5%	1/8W
RJ232	1-216-296-00	METAL CHIP	0	5%	1/8W
RJ233	1-216-295-00	METAL CHIP	0	5%	1/10W
RJ234	1-216-295-00	METAL CHIP	0	5%	1/10W
RJ235	1-216-296-00	METAL CHIP	0	5%	1/8W
RJ236	1-216-296-00	METAL CHIP	0	5%	1/8W
RJ237	1-216-295-00	METAL CHIP	0	5%	1/10W
RJ238	1-216-296-00	METAL CHIP	0	5%	1/8W
RJ239	1-216-296-00	METAL CHIP	0	5%	1/8W
RJ240	1-216-296-00	METAL CHIP	0	5%	1/8W
RJ241	1-216-296-00	METAL CHIP	0	5%	1/8W
RJ242	1-216-296-00	METAL CHIP	0	5%	1/8W
RJ243	1-216-296-00	METAL CHIP	0	5%	1/8W
RJ244	1-216-296-00	METAL CHIP	0	5%	1/8W
RJ245	1-216-296-00	METAL CHIP	0	5%	1/8W
RJ246	1-216-296-00	METAL CHIP	0	5%	1/8W
RJ247	1-216-296-00	METAL CHIP	0	5%	1/8W
RJ248	1-216-296-00	METAL CHIP	0	5%	1/8W
RJ249	1-216-296-00	METAL CHIP	0	5%	1/8W
RJ250	1-216-296-00	METAL CHIP	0	5%	1/8W
RJ251	1-216-296-00	METAL CHIP	0	5%	1/8W
RJ252	1-216-296-00	METAL CHIP	0	5%	1/8W
RJ253	1-216-296-00	METAL CHIP	0	5%	1/8W
RJ254	1-216-295-00	METAL CHIP	0	5%	1/10W
RJ255	1-216-296-00	METAL CHIP	0	5%	1/8W

Ref. No.	Part No.	Description			Remark
RJ256	1-216-296-00	METAL CHIP	0	5%	1/8W
RJ257	1-216-296-00	METAL CHIP	0	5%	1/8W
RJ258	1-216-295-00	METAL CHIP	0	5%	1/10W
RJ259	1-216-296-00	METAL CHIP	0	5%	1/8W
RJ260	1-216-295-00	METAL CHIP	0	5%	1/10W
RJ261	1-216-296-00	METAL CHIP	0	5%	1/8W
RJ262	1-216-296-00	METAL CHIP	0	5%	1/8W
RJ263	1-216-296-00	METAL CHIP	0	5%	1/8W
RJ264	1-216-296-00	METAL CHIP	0	5%	1/8W
RJ265	1-216-295-00	METAL CHIP	0	5%	1/10W
		< SWITCH >			
S201	1-571-977-11	SWITCH, TACTIL (POWER ON/OFF)			
S202	1-571-977-11	SWITCH, TACTIL (EJECT)			
S203	1-571-977-11	SWITCH, TACTIL (PAUSE)			
S204	1-571-977-11	SWITCH, TACTIL (COUNTER RESET)			
S205	1-571-977-11	SWITCH, TACTIL (EDIT)			
S206	1-571-977-11	SWITCH, TACTIL (SLOW/STILL ADJUST)			
S207	1-571-977-11	SWITCH, TACTIL (REC)			
S208	1-571-977-11	SWITCH, TACTIL (SYNCHRO EDIT)			
S209	1-571-977-11	SWITCH, TACTIL (SLOW/STILL ADJUST)			
S210	1-571-977-11	SWITCH, TACTIL (AUDIO LINE IN STEREO/BILINGUAL)			
**********					
*	A-7063-203-A	LC-38 BOARD, COMPLETE ********** (Ref. No. 3000 series)			
		< CAPACITOR >			
C101	1-163-038-00	CERAMIC CHIP	0.1uF		25V
C107	1-163-038-00	CERAMIC CHIP	0.1uF		25V
C108	1-126-157-11	ELECT	10uF	20%	16V
C109	1-163-038-00	CERAMIC CHIP	0.1uF		25V
C110	1-124-257-00	ELECT	2.2uF	20%	50V
C111	1-163-038-00	CERAMIC CHIP	0.1uF		25V
C112	1-124-635-00	ELECT	220uF	20%	6.3V
C117	1-124-638-11	ELECT	22uF	20%	10V
		< CONNECTOR >			
* CN101	1-691-050-21	HOUSING, CONNECTOR 18P			
* CN102	1-691-050-21	HOUSING, CONNECTOR 18P			
CN103	1-568-093-11	CONNECTOR (PLUG) 20P			
		< DIODE >			
⚠D101	8-719-400-18	DIODE MA152WK			
D102	8-719-400-18	DIODE MA152WK			
⚠D103	8-719-400-18	DIODE MA152WK			
D104	8-719-400-18	DIODE MA152WK			
⚠D105	8-719-400-18	DIODE MA152WK			

Ref. No.	Part No.	Description			Remark
		< IC >			
IC101	8-759-093-43	IC MB89093-106			
IC102	8-759-999-02	IC TL1596CDB			
IC104	8-759-074-40	IC PST572DMT-T1			
		< TRANSISTOR >			
Q101	8-729-421-19	TRANSISTOR UN2213			
Q106	8-729-420-20	TRANSISTOR XN4312			
		< RESISTOR >			
R101	1-216-057-00	METAL CHIP	2.2K	5%	1/10W
R102	1-216-057-00	METAL CHIP	2.2K	5%	1/10W
R103	1-216-057-00	METAL CHIP	2.2K	5%	1/10W
R105	1-216-049-00	METAL CHIP	1K	5%	1/10W
R109	1-216-073-00	METAL CHIP	10K	5%	1/10W
R110	1-216-073-00	METAL CHIP	10K	5%	1/10W
R111	1-216-073-00	METAL CHIP	10K	5%	1/10W
R112	1-216-073-00	METAL CHIP	10K	5%	1/10W
R113	1-216-073-00	METAL CHIP	10K	5%	1/10W
R114	1-216-073-00	METAL CHIP	10K	5%	1/10W
R115	1-216-073-00	METAL CHIP	10K	5%	1/10W
R116	1-216-073-00	METAL CHIP	10K	5%	1/10W
R117	1-216-073-00	METAL CHIP	10K	5%	1/10W
R118	1-216-073-00	METAL CHIP	10K	5%	1/10W
R119	1-216-073-00	METAL CHIP	10K	5%	1/10W
R120	1-216-073-00	METAL CHIP	10K	5%	1/10W
R121	1-216-295-00	METAL CHIP	0	5%	1/10W
R122	1-216-049-00	METAL CHIP	1K	5%	1/10W
R123	1-216-049-00	METAL CHIP	1K	5%	1/10W
R124	1-216-049-00	METAL CHIP	1K	5%	1/10W
R125	1-216-073-00	METAL CHIP	10K	5%	1/10W
R126	1-216-073-00	METAL CHIP	10K	5%	1/10W
R127	1-216-073-00	METAL CHIP	10K	5%	1/10W
R128	1-216-049-00	METAL CHIP	1K	5%	1/10W
R129	1-216-073-00	METAL CHIP	10K	5%	1/10W
R130	1-216-596-11	METAL GLAZE	2.7K	1%	1/10W
R131	1-216-049-00	METAL CHIP	1K	5%	1/10W
R132	1-216-105-00	METAL CHIP	220K	5%	1/10W
R133	1-216-057-00	METAL CHIP	2.2K	5%	1/10W
R136	1-216-295-00	METAL CHIP	0	5%	1/10W
R137	1-216-295-00	METAL CHIP	0	5%	1/10W
R138	1-216-073-00	METAL CHIP	10K	5%	1/10W
R139	1-216-073-00	METAL CHIP	10K	5%	1/10W
R140	1-216-113-00	METAL CHIP	470K	5%	1/10W
R142	1-216-049-00	METAL CHIP	1K	5%	1/10W
R146	1-216-049-00	METAL CHIP	1K	5%	1/10W
R147	1-216-073-00	METAL CHIP	10K	5%	1/10W
R148	1-216-295-00	METAL CHIP	0	5%	1/10W

The components identified by mark ⚠ or dotted line with mark. ⚠ are critical for safety. Replace only with part number specified.

LC-38 POWER BLOCK

Ref.No.	Part No.	Description			Remark
R149	1-216-049-00	METAL CHIP	1K	5%	1/10W
R150	1-216-049-00	METAL CHIP	1K	5%	1/10W
R153	1-216-041-00	METAL CHIP	470	5%	1/10W
R155	1-216-295-00	METAL CHIP	0	5%	1/10W
		< VARIABLE RESISTOR >			
RV101	1-228-994-00	RES, ADJ, METAL 10K			
RV102	1-228-994-00	RES, ADJ, METAL 10K			
		< VIBRATOR >			
X101	1-579-175-11	VIBRATOR, CERAMIC 10MHz			
**********					
	1-413-743-11	POWER BLOCK (AEP, E)			
	1-413-767-11	POWER BLOCK (UK)			
		**********			
		(Ref. No. 6000 series)			
		< CAPACITOR >			
⚠C101	9-903-191-01	MYLAR	0.22uF		250V
⚠C102	9-903-192-01	CERAMIC	2200PF		400V
⚠C103	9-903-192-01	CERAMIC	2200PF		400V
⚠C104	9-903-192-01	CERAMIC	2200PF		400V
⚠C105	9-903-192-01	CERAMIC	2200PF		400V
⚠C106	9-903-194-01	MYLAR	0.1uF		250V
⚠C107	9-903-195-01	CERAMIC	4700PF		400V
⚠C108	9-903-195-01	CERAMIC	4700PF		400V
⚠C109	9-903-195-01	CERAMIC	4700PF		400V
⚠C110	9-903-197-01	ELECT	47uF		400V
⚠C111	9-903-200-01	ELECT	1uF		100V
⚠C112	9-902-101-01	CERAMIC	100PF		1kV
⚠C113	9-900-525-01	MYLAR	0.047uF		400V
⚠C114	1-130-491-51	FILM	0.047uF		50V
⚠C115	1-130-491-51	FILM	0.047uF		50V
⚠C116	1-130-491-51	FILM	0.047uF		50V
C201	1-123-985-11	ELECT	1000uF		16V
C202	1-124-445-11	ELECT	100uF		16V
C203	9-900-540-01	ELECT	2200uF		10V
C204	9-902-107-01	ELECT	1uF		50V
C205	9-900-542-01	ELECT	470uF		10V
C206	1-124-443-00	ELECT	100uF	20%	10V
C207	1-126-101-11	ELECT	100uF	20%	16V
C208	1-124-443-00	ELECT	100uF	20%	10V
		< CONNECTOR >			
* CN201	1-564-018-11	PIN, CONNECTOR 8P			
		< DIODE >			
⚠D101	9-900-511-01	DIODE S1WBA60			
D102	9-902-095-01	DIODE ERA15-06			
D103	9-900-512-01	DIODE EG01C			
D104	8-719-200-82	DIODE 11ES2			
D105	8-719-109-63	DIODE RD3.0ESB2			
D106	9-900-514-01	DIODE MA165			
D201	9-903-218-01	DIODE ERA32-02			
D202	8-719-160-61	DIODE RD15F			
D203	9-903-219-01	DIODE RK44			
D204	9-903-220-01	DIODE AK04			
		< FUSE >			
⚠F101	9-903-217-01	FUSE, TIMER-LAG 2A 250V (UK)			
		< IC >			
⚠IC201	9-903-221-01	IC PQ05RF14			
⚠IC202	8-759-420-19	IC AN1431T			
⚠IC203	9-903-223-01	IC TA79L005P			
		< COIL >			
⚠L101	9-903-187-01	FILTER, LINE			
L102	9-903-189-11	CORE, BEAD			
⚠L201	9-900-539-01	CHOKE COIL 10uH			
⚠L202	9-900-539-01	CHOKE COIL 10uH			
		< IC LINK >			
⚠PS201	1-532-637-21	IC LINK ICP-N25 1.0A			
		< PHOTO COUPLER >			
⚠PC101	9-903-185-01	PHOTO COUPLER PS2561 (UK)			
		< TRANSISTOR >			
⚠Q101	9-903-184-01	TRANSISTOR 2SC4231			
Q102	9-900-517-01	TRANSISTOR 2SC3377			
		< RESISTOR >			
⚠R101	9-903-206-01	CARBON	1M		1/2W F
⚠R102	1-247-879-11	CEMENT	4.7		2W
⚠R103	9-903-208-01	CARBON	220K		1/2W
⚠R104	9-903-208-01	CARBON	220K		1/2W
R105	1-249-433-11	CARBON	22K	5%	1/4W
⚠R106	9-903-211-01	METAL	68K		3W
⚠R107	9-903-213-01	CARBON	220		1/2W
R108	1-249-414-11	CARBON	560	5%	1/4W
R109	1-247-791-11	CARBON	22		1/4W
R201	9-903-235-01	METAL	470		2W
R203	9-902-109-01	CARBON	47		1/2W
R204	1-215-428-00	METAL	2K	1%	1/4W
R205	1-215-426-00	METAL	1.6K	1%	1/4W

The components identified by mark ⚠ or dotted line with mark. ⚠ are critical for safety. Replace only with part number specified.

Ref. No.	Part No.	Description			Remark
R206	9-903-241-01	METAL	56K		1/4W
R207	1-247-855-11	CARBON	10K	5%	1/4W
		< TRANSFORMER >			
⚠T101	9-903-186-01	TRANSFORMER			
		< VARIABLE RESISTOR >			
VR201	9-903-244-01	RES, ADJ, CERMET 500			
**********					
*	A-7063-205-A	RJ-37 BOARD, COMPLETE			
		**********			
		(Ref. No. 5000 series)			
*	3-947-274-51	FRAME, REAR			
		< CAPACITOR >			
C101	1-163-141-00	CERAMIC CHIP	0.001uF	5%	50V
C102	1-163-117-00	CERAMIC CHIP	100PF	5%	50V
C104	1-163-117-00	CERAMIC CHIP	100PF	5%	50V
C106	1-163-117-00	CERAMIC CHIP	100PF	5%	50V
C121	1-163-009-11	CERAMIC CHIP	0.001uF	10%	50V
C123	1-163-009-11	CERAMIC CHIP	0.001uF	10%	50V
C125	1-163-031-11	CERAMIC CHIP	0.01uF		50V
C150	1-163-117-00	CERAMIC CHIP	100PF	5%	50V
C151	1-163-117-00	CERAMIC CHIP	100PF	5%	50V
C152	1-163-031-11	CERAMIC CHIP	0.01uF		50V
		< CONNECTOR >			
CN101	1-568-075-11	CONNECTOR (RECEPTALE) 12P			
CN102	1-568-077-11	CONNECTOR (RECEPTALE) 16P			
CN104	1-568-016-11	SOCKET 21P			
		< DIODE >			
D101	8-719-106-80	DIODE	RD13M-B2		
D120	8-719-106-17	DIODE	RD6.8M-B2		
D121	8-719-106-17	DIODE	RD6.8M-B2		
D122	8-719-106-17	DIODE	RD6.8M-B2		
D123	8-719-106-17	DIODE	RD6.8M-B2		
D124	8-719-106-80	DIODE	RD13M-B2		
D125	8-719-106-80	DIODE	RD13M-B2		
D126	8-719-106-43	DIODE	RD9.1M-B1		
D127	8-719-106-43	DIODE	RD9.1M-B1		
D128	8-719-106-43	DIODE	RD9.1M-B1		
D129	8-719-106-43	DIODE	RD9.1M-B1		
D150	8-719-106-80	DIODE	RD13M-B2		
D151	8-719-106-80	DIODE	RD13M-B2		
D152	8-719-106-80	DIODE	RD13M-B2		

Ref. No.	Part No.	Description			Remark
		< JACK >			
J101	1-695-102-11	JACK, PIN 6P (VIDEO LINE IN/OUT, AUDIO L/R LINE IN/OUT)			
J102	1-507-792-31	JACK (CONTROL S IN)			
J103	1-568-800-11	JACK, ULTRA SMALL (CONTROL L)			
		< JUMPER RESISTOR >			
JR101	1-216-296-00	METAL CHIP	0	5%	1/8W
JR103	1-216-295-00	METAL CHIP	0	5%	1/10W
JR104	1-216-295-00	METAL CHIP	0	5%	1/10W
JR105	1-216-296-00	METAL CHIP	0	5%	1/8W
JR106	1-216-296-00	METAL CHIP	0	5%	1/8W
JR107	1-216-296-00	METAL CHIP	0	5%	1/8W
JR108	1-216-296-00	METAL CHIP	0	5%	1/8W
JR111	1-216-296-00	METAL CHIP	0	5%	1/8W
JR112	1-216-296-00	METAL CHIP	0	5%	1/8W
JR113	1-216-296-00	METAL CHIP	0	5%	1/8W
JR114	1-216-296-00	METAL CHIP	0	5%	1/8W
JR115	1-216-296-00	METAL CHIP	0	5%	1/8W
JR116	1-216-296-00	METAL CHIP	0	5%	1/8W
JR117	1-216-295-00	METAL CHIP	0	5%	1/10W
		< COIL >			
L150	1-412-390-21	INDUCTOR CHIP	0uH		
		< RESISTOR >			
R101	1-216-022-00	METAL CHIP	75	5%	1/10W
R102	1-216-045-00	METAL CHIP	680	5%	1/10W
R103	1-216-049-00	METAL CHIP	1K	5%	1/10W
R104	1-216-045-00	METAL CHIP	680	5%	1/10W
R105	1-216-049-00	METAL CHIP	1K	5%	1/10W
R123	1-216-295-00	METAL CHIP	0	5%	1/10W
R124	1-216-049-00	METAL CHIP	1K	5%	1/10W
R125	1-216-295-00	METAL CHIP	0	5%	1/10W
R126	1-216-049-00	METAL CHIP	1K	5%	1/10W
		< SWITCH >			
S101	1-570-157-21	SWITCH, SLIDE (M/S)			
**********					

The components identified by mark ⚠ or dotted line with mark. ⚠ are critical for safety. Replace only with part number specified.

Ref.No.	Part No.	Description			Remark
*	A-7063-375-A	RP-159 BOARD, COMPLETE			
		**********			
		(Ref.No.1000 series)			
	1-569-347-11	CONNECTOR, FPC (TRANSLATION) 13P			
	1-643-188-11	FP-502 FLEXIBLE BOARD			
	1-690-803-11	CABLE, FLAT (FRS-9) 13P			
*	3-947-292-01	CASE (LID), SHIELD, RP			
*	3-947-293-01	CASE (MAIN), SHIELD, RP			
		< CAPACITOR >			
C001	1-163-031-11	CERAMIC CHIP	0.01uF		50V
C002	1-126-157-11	ELECT	10uF	20%	16V
C005	1-126-157-11	ELECT	10uF	20%	16V
C006	1-163-031-11	CERAMIC CHIP	0.01uF		50V
C007	1-163-031-11	CERAMIC CHIP	0.01uF		50V
C008	1-163-809-11	CERAMIC CHIP	0.047uF	10%	25V
C009	1-164-489-11	CERAMIC CHIP	0.22uF	10%	16V
C010	1-164-489-11	CERAMIC CHIP	0.22uF	10%	16V
C011	1-163-809-11	CERAMIC CHIP	0.047uF	10%	25V
C012	1-163-031-11	CERAMIC CHIP	0.01uF		50V
C013	1-163-031-11	CERAMIC CHIP	0.01uF		50V
C014	1-163-031-11	CERAMIC CHIP	0.01uF		50V
C015	1-163-031-11	CERAMIC CHIP	0.01uF		50V
C016	1-163-031-11	CERAMIC CHIP	0.01uF		50V
C018	1-163-031-11	CERAMIC CHIP	0.01uF		50V
C019	1-163-031-11	CERAMIC CHIP	0.01uF		50V
C020	1-163-031-11	CERAMIC CHIP	0.01uF		50V
C021	1-126-157-11	ELECT	10uF	20%	16V
C022	1-163-038-00	CERAMIC CHIP	0.1uF		25V
C025	1-126-157-11	ELECT	10uF	20%	16V
C026	1-163-038-00	CERAMIC CHIP	0.1uF		25V
C027	1-163-031-11	CERAMIC CHIP	0.01uF		50V
C028	1-163-031-11	CERAMIC CHIP	0.01uF		50V
C029	1-164-004-11	CERAMIC CHIP	0.1uF	10%	25V
C030	1-163-038-00	CERAMIC CHIP	0.1uF		25V
C031	1-163-031-11	CERAMIC CHIP	0.01uF		50V
C032	1-163-031-11	CERAMIC CHIP	0.01uF		50V
C033	1-163-038-00	CERAMIC CHIP	0.1uF		25V
C034	1-163-239-11	CERAMIC CHIP	33PF	5%	50V
C035	1-127-558-11	ELECT(SOLID)	10uF	20%	10V
C037	1-163-117-00	CERAMIC CHIP	100PF	5%	50V
C038	1-163-121-00	CERAMIC CHIP	150PF	5%	50V
C039	1-163-115-00	CERAMIC CHIP	82PF	5%	50V
C040	1-163-117-00	CERAMIC CHIP	100PF	5%	50V
C041	1-163-038-00	CERAMIC CHIP	0.1uF		25V
C042	1-163-038-00	CERAMIC CHIP	0.1uF		25V
C044	1-163-115-00	CERAMIC CHIP	82PF	5%	50V
C045	1-126-157-11	ELECT	10uF	20%	16V

Ref.No.	Part No.	Description			Remark
		< CONNECTOR >			
CN001	1-566-545-41	CONNECTOR, FPC (NON ZIF) 13P			
* CN002	1-691-072-11	HOUSING, CONNECTOR 13P			
CN003	1-506-484-11	PIN, CONNECTOR 5P			
		< IC >			
IC001	8-752-032-35	IC CXA1202Q-Z			
IC002	8-759-062-51	IC CXA1443M			
		< COIL >			
L001	1-408-970-21	INDUCTOR	10uH		
L002	1-407-169-XX	INDUCTOR	100uH		
L003	1-407-169-XX	INDUCTOR	100uH		
L004	1-408-970-21	INDUCTOR	10uH		
L005	1-408-972-21	INDUCTOR	15uH		
L006	1-408-948-00	INDUCTOR	220uH		
L007	1-408-970-21	INDUCTOR	10uH		
L008	1-407-169-XX	INDUCTOR	100uH		
		< TRANSISTOR >			
Q003	8-729-422-36	TRANSISTOR	2SB709A-Q		
Q005	8-729-216-22	TRANSISTOR	2SA1162-G		
Q006	8-729-422-36	TRANSISTOR	2SB709A-Q		
Q007	8-729-422-36	TRANSISTOR	2SB709A-Q		
Q008	8-729-421-19	TRANSISTOR	UN2213		
Q009	8-729-424-18	TRANSISTOR	UN2113		
		< RESISTOR >			
R004	1-216-295-00	METAL CHIP	0	5%	1/10W
R005	1-216-081-00	METAL CHIP	22K	5%	1/10W
R006	1-216-309-00	METAL CHIP	5.6	5%	1/10W
R008	1-216-081-00	METAL CHIP	22K	5%	1/10W
R009	1-216-051-00	METAL CHIP	1.2K	5%	1/10W
R010	1-216-081-00	METAL CHIP	22K	5%	1/10W
R011	1-216-085-00	METAL CHIP	33K	5%	1/10W
R012	1-216-077-00	METAL CHIP	15K	5%	1/10W
R013	1-216-051-00	METAL CHIP	1.2K	5%	1/10W
R014	1-216-081-00	METAL CHIP	22K	5%	1/10W
R015	1-216-085-00	METAL CHIP	33K	5%	1/10W
R016	1-216-075-00	METAL CHIP	12K	5%	1/10W
R017	1-216-081-00	METAL CHIP	22K	5%	1/10W
R018	1-216-081-00	METAL CHIP	22K	5%	1/10W
R019	1-216-073-00	METAL CHIP	10K	5%	1/10W
R021	1-216-073-00	METAL CHIP	10K	5%	1/10W
R022	1-216-073-00	METAL CHIP	10K	5%	1/10W
R023	1-216-295-00	METAL CHIP	0	5%	1/10W
R026	1-216-295-00	METAL CHIP	0	5%	1/10W
R027	1-216-071-00	METAL CHIP	8.2K	5%	1/10W

Ref.No.	Part No.	Description			Remark
R028	1-216-053-00	METAL CHIP	1.5K	5%	1/10W
R029	1-216-065-00	METAL CHIP	4.7K	5%	1/10W
R030	1-216-049-00	METAL CHIP	1K	5%	1/10W
R032	1-216-029-00	METAL CHIP	150	5%	1/10W
R033	1-216-065-00	METAL CHIP	4.7K	5%	1/10W
R034	1-216-295-00	METAL CHIP	0	5%	1/10W
R036	1-216-049-00	METAL CHIP	1K	5%	1/10W
R037	1-216-025-00	METAL CHIP	100	5%	1/10W
R039	1-216-025-00	METAL CHIP	100	5%	1/10W
R040	1-216-041-00	METAL CHIP	470	5%	1/10W
R041	1-216-013-00	METAL CHIP	33	5%	1/10W
R042	1-216-005-00	METAL CHIP	15	5%	1/10W
R043	1-216-057-00	METAL CHIP	2.2K	5%	1/10W
R044	1-216-065-00	METAL CHIP	4.7K	5%	1/10W
R045	1-216-035-00	METAL CHIP	270	5%	1/10W
R046	1-216-033-00	METAL CHIP	220	5%	1/10W
R047	1-216-081-00	METAL CHIP	22K	5%	1/10W
R048	1-216-085-00	METAL CHIP	33K	5%	1/10W
R050	1-216-025-00	METAL CHIP	100	5%	1/10W
R052	1-216-309-00	METAL CHIP	5.6	5%	1/10W
R053	1-216-295-00	METAL CHIP	0	5%	1/10W
		< VARIABLE RESISTOR >			
RV001	1-241-123-11	RES, ADJ, CARBON 47K			
RV002	1-241-123-11	RES, ADJ, CARBON 47K			
RV003	1-230-721-11	RES, ADJ, CARBON 10K			
**********					
*	A-7063-201-A	SS-144 BOARD, COMPLETE			
		**********			
		(Ref.No.2000 series)			
	1-690-801-11	CABLE, FLAT (FSV-1) 24P			
	1-696-042-11	CABLE, FLAT (FSV-4)			
*	3-947-505-01	CASE, SHIELD, PWM			
		< CAPACITOR >			
C006	1-163-101-00	CERAMIC CHIP	22PF	5%	50V
C007	1-163-038-00	CERAMIC CHIP	0.1uF		25V
C008	1-163-038-00	CERAMIC CHIP	0.1uF		25V
C009	1-126-157-11	ELECT	10uF	20%	16V
C010	1-163-038-00	CERAMIC CHIP	0.1uF		25V
C012	1-163-229-11	CERAMIC CHIP	12PF	5%	50V
C013	1-163-235-11	CERAMIC CHIP	22PF	5%	50V
C015	1-163-087-00	CERAMIC CHIP	4PF		50V
C016	1-163-009-11	CERAMIC CHIP	0.001uF	10%	50V
C017	1-164-489-11	CERAMIC CHIP	0.22uF	10%	16V
C019	1-164-489-11	CERAMIC CHIP	0.22uF	10%	16V
C020	1-126-157-11	ELECT	10uF	20%	16V
C021	1-163-038-00	CERAMIC CHIP	0.1uF		25V

Ref.No.	Part No.	Description			Remark
C022	1-126-157-11	ELECT	10uF	20%	16V
C023	1-163-038-00	CERAMIC CHIP	0.1uF		25V
C024	1-126-157-11	ELECT	10uF	20%	16V
C025	1-126-157-11	ELECT	10uF	20%	16V
C026	1-163-038-00	CERAMIC CHIP	0.1uF		25V
C029	1-163-009-11	CERAMIC CHIP	0.001uF	10%	50V
C030	1-163-809-11	CERAMIC CHIP	0.047uF	10%	25V
C031	1-163-037-11	CERAMIC CHIP	0.022uF	10%	25V
C032	1-163-037-11	CERAMIC CHIP	0.022uF	10%	25V
C033	1-163-031-11	CERAMIC CHIP	0.01uF		50V
C034	1-163-009-11	CERAMIC CHIP	0.001uF	10%	50V
C035	1-163-009-11	CERAMIC CHIP	0.001uF	10%	50V
C036	1-163-031-11	CERAMIC CHIP	0.01uF		50V
C037	1-163-031-11	CERAMIC CHIP	0.01uF		50V
C038	1-163-038-00	CERAMIC CHIP	0.1uF		25V
C039	1-126-157-11	ELECT	10uF	20%	16V
C040	1-163-038-00	CERAMIC CHIP	0.1uF		25V
C041	1-163-031-11	CERAMIC CHIP	0.01uF		50V
C042	1-163-011-11	CERAMIC CHIP	0.0015uF	10%	50V
C043	1-163-011-11	CERAMIC CHIP	0.0015uF	10%	50V
C045	1-163-037-11	CERAMIC CHIP	0.022uF	10%	25V
C046	1-163-809-11	CERAMIC CHIP	0.047uF	10%	25V
C101	1-164-004-11	CERAMIC CHIP	0.1uF	10%	25V
C102	1-162-638-11	CERAMIC CHIP	1uF		16V
C103	1-163-038-00	CERAMIC CHIP	0.1uF		25V
C104	1-164-004-11	CERAMIC CHIP	0.1uF	10%	25V
C105	1-164-004-11	CERAMIC CHIP	0.1uF	10%	25V
C106	1-163-019-00	CERAMIC CHIP	0.0068uF	10%	50V
C107	1-163-037-11	CERAMIC CHIP	0.022uF	10%	25V
C108	1-163-017-00	CERAMIC CHIP	0.0047uF	5%	50V
C109	1-130-495-00	MYLAR	0.1uF	5%	50V
C110	1-163-809-11	CERAMIC CHIP	0.047uF	10%	25V
C111	1-163-035-00	CERAMIC CHIP	0.047uF		50V
C112	1-126-163-11	ELECT	4.7uF	20%	50V
C113	1-164-330-21	CERAMIC CHIP	0.22uF	10%	16V
C114	1-164-330-21	CERAMIC CHIP	0.22uF	10%	16V
C115	1-164-182-11	CERAMIC CHIP	0.0033uF	10%	50V
C116	1-164-182-11	CERAMIC CHIP	0.0033uF	10%	50V
C117	1-164-182-11	CERAMIC CHIP	0.0033uF	10%	50V
C118	1-164-232-11	CERAMIC CHIP	0.01uF		50V
C120	1-163-038-00	CERAMIC CHIP	0.1uF		25V
C121	1-126-301-11	ELECT	1uF	20%	50V
C122	1-163-038-00	CERAMIC CHIP	0.1uF		25V
C123	1-163-038-00	CERAMIC CHIP	0.1uF		25V
C124	1-163-038-00	CERAMIC CHIP	0.1uF		25V
C125	1-124-589-11	ELECT	47uF	20%	16V
C126	1-127-498-00	ELECT(SOLID)	15uF	20%	16V
C127	1-163-257-11	CERAMIC CHIP	180PF	5%	50V
C128	1-163-077-00	CERAMIC CHIP	0.1uF	10%	25V

Ref. No.	Part No.	Description			Remark
C129	1-163-035-00	CERAMIC CHIP	0.047uF		50V
C130	1-163-101-00	CERAMIC CHIP	22PF	5%	50V
C131	1-163-101-00	CERAMIC CHIP	22PF	5%	50V
C132	1-127-558-11	ELECT(SOLID)	10uF	20%	10V
C133	1-163-101-00	CERAMIC CHIP	22PF	5%	50V
C134	1-163-101-00	CERAMIC CHIP	22PF	5%	50V
C135	1-127-558-11	ELECT(SOLID)	10uF	20%	10V
C136	1-127-512-00	ELECT(SOLID)	10uF	20%	16V
C137	1-126-157-11	ELECT	10uF	20%	16V
C140	1-163-251-11	CERAMIC CHIP	100PF	5%	50V
C144	1-164-489-11	CERAMIC CHIP	0.22uF	10%	16V
C145	1-163-038-00	CERAMIC CHIP	0.1uF		25V
C146	1-163-989-11	CERAMIC CHIP	0.033uF	10%	25V
C147	1-164-232-11	CERAMIC CHIP	0.01uF		50V
C148	1-164-489-11	CERAMIC CHIP	0.22uF	10%	16V
C149	1-163-037-11	CERAMIC CHIP	0.022uF	10%	25V
C151	1-163-011-11	CERAMIC CHIP	0.0015uF	10%	50V
C152	1-163-239-11	CERAMIC CHIP	33PF	5%	50V
		< CONNECTOR >			
* CN001	1-691-083-11	HOUSING, CONNECTOR 24P			
* CN002	1-691-072-11	HOUSING, CONNECTOR 13P			
* CN004	1-691-072-11	HOUSING, CONNECTOR 13P			
CN005	1-566-546-11	CONNECTOR, FPC (NON ZIF) 14P			
CN101	1-566-531-11	CONNECTOR, FPC (ZIF) 15P			
CN102	1-566-542-31	CONNECTOR, FPC (NON ZIF) 10P			
* CN103	1-565-541-11	PIN, CONNECTOR (PC BOARD) 2P			
* CN104	1-565-541-11	PIN, CONNECTOR (PC BOARD) 2P			
		< DIODE >			
⚠D002	8-719-200-27	DIODE	E10DS2		
⚠D003	8-719-200-27	DIODE	E10DS2		
D004	8-719-104-34	DIODE	1S2836		
D102	8-719-938-75	DIODE	SB05-05CP		
D103	8-719-938-75	DIODE	SB05-05CP		
D106	8-719-104-34	DIODE	1S2836		
		< FERRITE BEAD >			
FB002	1-412-390-21	INDUCTOR CHIP	0uH		
FB003	1-412-390-21	INDUCTOR CHIP	0uH		
FB102	1-412-390-21	INDUCTOR CHIP	0uH		
FB103	1-412-390-21	INDUCTOR CHIP	0uH		
FB104	1-412-390-21	INDUCTOR CHIP	0uH		
		< IC >			
IC002	8-752-836-84	IC	CXP80624-415Q		
IC003	8-759-070-96	IC	CXA1481AQ		
IC005	8-759-945-17	IC	MB3775PF		
IC101	8-759-823-65	IC	MCD002AM		
IC102	8-759-990-55	IC	CXA8006M		
IC103	8-759-148-05	IC	CXA8010M		
IC104	8-759-823-94	IC	LB1836M		
		< COIL >			
L002	1-408-978-21	INDUCTOR	47uH		
L004	1-407-169-XX	INDUCTOR	100uH		
L007	1-408-970-21	INDUCTOR	10uH		
L008	1-424-522-21	COIL, CHOKE	10uH		
L009	1-424-524-21	COIL, CHOKE	47uH		
L010	1-424-524-21	COIL, CHOKE	47uH		
L101	1-412-010-41	INDUCTOR CHIP	22uH		
		< IC LINK >			
⚠PS101	1-532-605-00	LINK, IC	0.4A ICP-N10		
⚠PS999	1-532-833-21	LINK, IC			
		< TRANSISTOR >			
Q001	8-729-901-01	TRANSISTOR	DTC144EK		
Q003	8-729-100-66	TRANSISTOR	2SC1623-L6		
Q004	8-729-901-01	TRANSISTOR	DTC144EK		
Q005	8-729-901-01	TRANSISTOR	DTC144EK		
Q007	8-729-901-01	TRANSISTOR	DTC144EK		
Q102	8-729-901-06	TRANSISTOR	DTA144EK		
Q104	8-729-424-76	TRANSISTOR	UN2210		
Q105	8-729-424-76	TRANSISTOR	UN2210		
Q106	8-729-420-12	TRANSISTOR	XN4213		
Q108	8-729-100-66	TRANSISTOR	2SC1623-L6		
⚠Q109	8-729-805-25	TRANSISTOR	2SB1121-S		
Q110	8-729-100-66	TRANSISTOR	2SC1623-L6		
⚠Q111	8-729-805-25	TRANSISTOR	2SB1121-S		
Q112	8-729-422-36	TRANSISTOR	2SB709A-Q		
Q113	8-729-100-66	TRANSISTOR	2SC1623-L6		
Q114	8-729-402-81	TRANSISTOR	XN4501		
Q115	8-729-901-04	TRANSISTOR	DTA114EK		
		< RESISTOR >			
R001	1-216-073-00	METAL CHIP	10K	5%	1/10W
R002	1-216-073-00	METAL CHIP	10K	5%	1/10W
R003	1-216-073-00	METAL CHIP	10K	5%	1/10W
R004	1-216-073-00	METAL CHIP	10K	5%	1/10W
R007	1-216-049-00	METAL CHIP	1K	5%	1/10W
R008	1-216-049-00	METAL CHIP	1K	5%	1/10W
R009	1-216-049-00	METAL CHIP	1K	5%	1/10W
R011	1-216-073-00	METAL CHIP	10K	5%	1/10W
R012	1-216-073-00	METAL CHIP	10K	5%	1/10W
R013	1-216-073-00	METAL CHIP	10K	5%	1/10W
R014	1-216-073-00	METAL CHIP	10K	5%	1/10W

The components identified by mark ⚠ or dotted line with mark ⚠ are critical for safety. Replace only with part number specified.

Ref.No.	Part No.	Description			Remark
R015	1-216-073-00	METAL CHIP	10K	5%	1/10W
R016	1-216-073-00	METAL CHIP	10K	5%	1/10W
R020	1-216-073-00	METAL CHIP	10K	5%	1/10W
R021	1-216-073-00	METAL CHIP	10K	5%	1/10W
R023	1-216-073-00	METAL CHIP	10K	5%	1/10W
R024	1-216-073-00	METAL CHIP	10K	5%	1/10W
R025	1-216-073-00	METAL CHIP	10K	5%	1/10W
R026	1-216-073-00	METAL CHIP	10K	5%	1/10W
R027	1-216-295-00	METAL CHIP	0	5%	1/10W
R030	1-216-089-00	METAL CHIP	47K	5%	1/10W
R032	1-216-295-00	METAL CHIP	0	5%	1/10W
R033	1-216-049-00	METAL CHIP	1K	5%	1/10W
R034	1-216-097-00	METAL CHIP	100K	5%	1/10W
R035	1-216-097-00	METAL CHIP	100K	5%	1/10W
R036	1-216-097-00	METAL CHIP	100K	5%	1/10W
R037	1-216-049-00	METAL CHIP	1K	5%	1/10W
R039	1-216-049-00	METAL CHIP	1K	5%	1/10W
R040	1-216-073-00	METAL CHIP	10K	5%	1/10W
R041	1-216-073-00	METAL CHIP	10K	5%	1/10W
R043	1-216-089-00	METAL CHIP	47K	5%	1/10W
R044	1-216-089-00	METAL CHIP	47K	5%	1/10W
R046	1-216-049-00	METAL CHIP	1K	5%	1/10W
R049	1-216-295-00	METAL CHIP	0	5%	1/10W
R052	1-216-057-00	METAL CHIP	2.2K	5%	1/10W
R053	1-216-049-00	METAL CHIP	1K	5%	1/10W
R055	1-216-049-00	METAL CHIP	1K	5%	1/10W
R056	1-216-049-00	METAL CHIP	1K	5%	1/10W
R057	1-216-049-00	METAL CHIP	1K	5%	1/10W
R058	1-216-049-00	METAL CHIP	1K	5%	1/10W
R059	1-216-049-00	METAL CHIP	1K	5%	1/10W
R061	1-216-089-00	METAL CHIP	47K	5%	1/10W
R062	1-216-089-00	METAL CHIP	47K	5%	1/10W
R063	1-216-089-00	METAL CHIP	47K	5%	1/10W
R064	1-216-089-00	METAL CHIP	47K	5%	1/10W
R065	1-216-089-00	METAL CHIP	47K	5%	1/10W
R067	1-216-089-00	METAL CHIP	47K	5%	1/10W
R069	1-216-073-00	METAL CHIP	10K	5%	1/10W
R070	1-216-073-00	METAL CHIP	10K	5%	1/10W
R071	1-216-073-00	METAL CHIP	10K	5%	1/10W
R072	1-216-073-00	METAL CHIP	10K	5%	1/10W
R073	1-216-073-00	METAL CHIP	10K	5%	1/10W
R075	1-216-073-00	METAL CHIP	10K	5%	1/10W
R077	1-216-049-00	METAL CHIP	1K	5%	1/10W
R079	1-216-049-00	METAL CHIP	1K	5%	1/10W
R080	1-216-049-00	METAL CHIP	1K	5%	1/10W
R081	1-216-049-00	METAL CHIP	1K	5%	1/10W
R082	1-216-049-00	METAL CHIP	1K	5%	1/10W
R083	1-216-049-00	METAL CHIP	1K	5%	1/10W
R084	1-216-049-00	METAL CHIP	1K	5%	1/10W

Ref.No.	Part No.	Description			Remark
R085	1-216-049-00	METAL CHIP	1K	5%	1/10W
R086	1-216-049-00	METAL CHIP	1K	5%	1/10W
R087	1-216-049-00	METAL CHIP	1K	5%	1/10W
R088	1-216-061-00	METAL CHIP	3.3K	5%	1/10W
R089	1-216-049-00	METAL CHIP	1K	5%	1/10W
R090	1-216-049-00	METAL CHIP	1K	5%	1/10W
R091	1-216-049-00	METAL CHIP	1K	5%	1/10W
R092	1-216-049-00	METAL CHIP	1K	5%	1/10W
R093	1-216-049-00	METAL CHIP	1K	5%	1/10W
R094	1-216-049-00	METAL CHIP	1K	5%	1/10W
R095	1-216-295-00	METAL CHIP	0	5%	1/10W
R096	1-216-073-00	METAL CHIP	10K	5%	1/10W
R097	1-216-061-00	METAL CHIP	3.3K	5%	1/10W
R098	1-216-049-00	METAL CHIP	1K	5%	1/10W
R099	1-216-049-00	METAL CHIP	1K	5%	1/10W
R101	1-216-689-11	METAL CHIP	39K	0.5%	1/10W
R103	1-216-073-00	METAL CHIP	10K	5%	1/10W
R104	1-216-073-00	METAL CHIP	10K	5%	1/10W
R105	1-216-073-00	METAL CHIP	10K	5%	1/10W
R106	1-216-097-00	METAL CHIP	100K	5%	1/10W
R107	1-216-089-00	METAL CHIP	47K	5%	1/10W
R108	1-216-089-00	METAL CHIP	47K	5%	1/10W
R109	1-216-097-00	METAL CHIP	100K	5%	1/10W
R110	1-216-061-00	METAL CHIP	3.3K	5%	1/10W
R112	1-216-089-00	METAL CHIP	47K	5%	1/10W
R113	1-216-037-00	METAL CHIP	330	5%	1/10W
R116	1-217-671-11	METAL CHIP	1	5%	1/10W
R117	1-217-671-11	METAL CHIP	1	5%	1/10W
R118	1-217-671-11	METAL CHIP	1	5%	1/10W
R119	1-217-671-11	METAL CHIP	1	5%	1/10W
R120	1-216-083-00	METAL CHIP	27K	5%	1/10W
R121	1-216-083-00	METAL CHIP	27K	5%	1/10W
R122	1-216-295-00	METAL CHIP	0	5%	1/10W
R123	1-216-083-00	METAL CHIP	27K	5%	1/10W
R124	1-216-073-00	METAL CHIP	10K	5%	1/10W
R125	1-216-049-00	METAL CHIP	1K	5%	1/10W
R126	1-216-073-00	METAL CHIP	10K	5%	1/10W
R128	1-216-295-00	METAL CHIP	0	5%	1/10W
R130	1-216-121-00	METAL CHIP	1M	5%	1/10W
R131	1-216-121-00	METAL CHIP	1M	5%	1/10W
R134	1-216-089-00	METAL CHIP	47K	5%	1/10W
R135	1-216-069-00	METAL CHIP	6.8K	5%	1/10W
R137	1-216-083-00	METAL CHIP	27K	5%	1/10W
R138	1-216-069-00	METAL CHIP	6.8K	5%	1/10W
R140	1-216-057-00	METAL CHIP	2.2K	5%	1/10W
R141	1-216-063-00	METAL CHIP	3.9K	5%	1/10W
R142	1-216-033-00	METAL CHIP	220	5%	1/10W
R143	1-216-069-00	METAL CHIP	6.8K	5%	1/10W
R144	1-216-057-00	METAL CHIP	2.2K	5%	1/10W

Ref. No.	Part No.	Description			Remark
R145	1-216-079-00	METAL CHIP	18K	5%	1/10W
R146	1-216-045-00	METAL CHIP	680	5%	1/10W
R147	1-216-067-00	METAL CHIP	5.6K	5%	1/10W
R148	1-216-055-00	METAL CHIP	1.8K	5%	1/10W
R149	1-216-057-00	METAL CHIP	2.2K	5%	1/10W
R150	1-216-079-00	METAL CHIP	18K	5%	1/10W
R151	1-216-045-00	METAL CHIP	680	5%	1/10W
R152	1-216-067-00	METAL CHIP	5.6K	5%	1/10W
R153	1-216-051-00	METAL CHIP	1.2K	5%	1/10W
R159	1-216-063-00	METAL CHIP	3.9K	5%	1/10W
R161	1-216-295-00	METAL CHIP	0	5%	1/10W
R163	1-216-295-00	METAL CHIP	0	5%	1/10W
R165	1-216-192-00	METAL CHIP	560	5%	1/8W
R166	1-216-089-00	METAL CHIP	47K	5%	1/10W
R169	1-216-097-00	METAL CHIP	100K	5%	1/10W
R170	1-216-295-00	METAL CHIP	0	5%	1/10W
R171	1-216-295-00	METAL CHIP	0	5%	1/10W
R172	1-216-295-00	METAL CHIP	0	5%	1/10W
R177	1-216-295-00	METAL CHIP	0	5%	1/10W
R179	1-216-061-00	METAL CHIP	3.3K	5%	1/10W
R180	1-216-061-00	METAL CHIP	3.3K	5%	1/10W
R193	1-216-073-00	METAL CHIP	10K	5%	1/10W
R194	1-216-073-00	METAL CHIP	10K	5%	1/10W
R195	1-216-073-00	METAL CHIP	10K	5%	1/10W
R196	1-216-073-00	METAL CHIP	10K	5%	1/10W
R197	1-216-089-00	METAL CHIP	47K	5%	1/10W
R198	1-216-089-00	METAL CHIP	47K	5%	1/10W
R200	1-216-295-00	METAL CHIP	0	5%	1/10W
R202	1-216-069-00	METAL CHIP	6.8K	5%	1/10W
R203	1-216-067-00	METAL CHIP	5.6K	5%	1/10W
R205	1-216-089-00	METAL CHIP	47K	5%	1/10W
R209	1-216-689-11	METAL CHIP	39K	0.5%	1/10W
R210	1-216-089-00	METAL CHIP	47K	5%	1/10W
R211	1-216-295-00	METAL CHIP	0	5%	1/10W
R212	1-216-081-00	METAL CHIP	22K	5%	1/10W
R213	1-216-097-00	METAL CHIP	100K	5%	1/10W
R214	1-216-073-00	METAL CHIP	10K	5%	1/10W
R217	1-216-041-00	METAL CHIP	470	5%	1/10W
R218	1-216-041-00	METAL CHIP	470	5%	1/10W
R219	1-216-069-00	METAL CHIP	6.8K	5%	1/10W
R220	1-216-069-00	METAL CHIP	6.8K	5%	1/10W
R221	1-216-295-00	METAL CHIP	0	5%	1/10W
R226	1-216-295-00	METAL CHIP	0	5%	1/10W
R229	1-216-295-00	METAL CHIP	0	5%	1/10W
R230	1-216-099-00	METAL CHIP	120K	5%	1/10W
R231	1-216-099-00	METAL CHIP	120K	5%	1/10W
R232	1-216-172-00	METAL CHIP	82	5%	1/8W
R233	1-216-096-00	METAL CHIP	91K	5%	1/10W
R234	1-216-109-00	METAL CHIP	330K	5%	1/10W

Ref. No.	Part No.	Description			Remark
R236	1-216-295-00	METAL CHIP	0	5%	1/10W
R237	1-216-295-00	METAL CHIP	0	5%	1/10W
R238	1-216-295-00	METAL CHIP	0	5%	1/10W
R239	1-216-295-00	METAL CHIP	0	5%	1/10W
R240	1-216-089-00	METAL CHIP	47K	5%	1/10W
R241	1-216-097-00	METAL CHIP	100K	5%	1/10W
R242	1-216-073-00	METAL CHIP	10K	5%	1/10W
R243	1-216-049-00	METAL CHIP	1K	5%	1/10W
R244	1-216-121-00	METAL CHIP	1M	5%	1/10W
R245	1-216-048-00	METAL CHIP	910	5%	1/10W
R246	1-216-105-00	METAL CHIP	220K	5%	1/10W
R247	1-216-039-00	METAL CHIP	390	5%	1/10W
R249	1-216-073-00	METAL CHIP	10K	5%	1/10W
R250	1-216-069-00	METAL CHIP	6.8K	5%	1/10W
R251	1-216-089-00	METAL CHIP	47K	5%	1/10W
R253	1-216-074-00	METAL CHIP	11K	5%	1/10W
R255	1-216-045-00	METAL CHIP	680	5%	1/10W
R256	1-216-073-00	METAL CHIP	10K	5%	1/10W
R257	1-216-105-00	METAL CHIP	220K	5%	1/10W
R258	1-216-097-00	METAL CHIP	100K	5%	1/10W
R259	1-216-089-00	METAL CHIP	47K	5%	1/10W

< VARIABLE RESISTOR >

RV102	1-238-089-11	RES, ADJ, CERMET	4.7K		

< VIBRATOR >

X002	1-579-368-31	VIBRATOR, CRYSTAL (11.72MHz)			

****

* A-7063-182-A UC-13 BOARD, COMPLETE

****

(Ref. No. 2000 series)

1-690-804-11 CABLE, FLAT (FUS-2) 14P

< CONNECTOR >

CN801	1-566-529-11	CONNECTOR, FPC (ZIF) 13P			
CN802	1-566-527-11	CONNECTOR, FPC (ZIF) 11P			
CN803	1-566-530-11	CONNECTOR, FPC (ZIF) 14P			

****

* A-7063-374-A VI-118 BOARD, COMPLETE

****

(Ref. No. 1000 series)

3-948-500-01 SCREW, BV (3X10) RING

< CAPACITOR >

C101	1-126-157-11	ELECT	10uF	20%	16V
C102	1-163-031-11	CERAMIC CHIP	0.01uF		50V

Ref. No.	Part No.	Description			Remark
C103	1-163-031-11	CERAMIC CHIP	0.01uF		50V
C104	1-163-031-11	CERAMIC CHIP	0.01uF		50V
C105	1-163-011-11	CERAMIC CHIP	0.0015uF	10%	50V
C106	1-163-127-00	CERAMIC CHIP	270PF	5%	50V
C115	1-163-031-11	CERAMIC CHIP	0.01uF		50V
C116	1-163-031-11	CERAMIC CHIP	0.01uF		50V
C118	1-163-031-11	CERAMIC CHIP	0.01uF		50V
C119	1-163-031-11	CERAMIC CHIP	0.01uF		50V
C120	1-163-095-00	CERAMIC CHIP	12PF	5%	50V
C121	1-163-031-11	CERAMIC CHIP	0.01uF		50V
C124	1-163-113-00	CERAMIC CHIP	68PF	5%	50V
C125	1-163-109-00	CERAMIC CHIP	47PF	5%	50V
C128	1-163-133-00	CERAMIC CHIP	470PF	5%	50V
C129	1-163-115-00	CERAMIC CHIP	82PF	5%	50V
C130	1-163-111-00	CERAMIC CHIP	56PF	5%	50V
C131	1-124-638-11	ELECT	22uF	20%	10V
C132	1-163-229-11	CERAMIC CHIP	12PF	5%	50V
C133	1-124-638-11	ELECT	22uF	20%	10V
C134	1-163-031-11	CERAMIC CHIP	0.01uF		50V
C135	1-163-031-11	CERAMIC CHIP	0.01uF		50V
C136	1-126-157-11	ELECT	10uF	20%	16V
C139	1-163-119-00	CERAMIC CHIP	120PF	5%	50V
C142	1-163-257-11	CERAMIC CHIP	180PF	5%	50V
C149	1-163-031-11	CERAMIC CHIP	0.01uF		50V
C152	1-163-119-00	CERAMIC CHIP	120PF	5%	50V
C153	1-163-115-00	CERAMIC CHIP	82PF	5%	50V
C154	1-164-005-11	CERAMIC CHIP	0.47uF		25V
C155	1-126-157-11	ELECT	10uF	20%	16V
C156	1-126-157-11	ELECT	10uF	20%	16V
C157	1-163-031-11	CERAMIC CHIP	0.01uF		50V
C158	1-163-031-11	CERAMIC CHIP	0.01uF		50V
C159	1-126-157-11	ELECT	10uF	20%	16V
C160	1-126-162-11	ELECT	3.3uF	20%	50V
C161	1-163-031-11	CERAMIC CHIP	0.01uF		50V
C162	1-126-157-11	ELECT	10uF	20%	16V
C163	1-126-162-11	ELECT	3.3uF	20%	50V
C164	1-126-157-11	ELECT	10uF	20%	16V
C165	1-126-157-11	ELECT	10uF	20%	16V
C166	1-126-157-11	ELECT	10uF	20%	16V
C167	1-163-031-11	CERAMIC CHIP	0.01uF		50V
C168	1-164-004-11	CERAMIC CHIP	0.1uF	10%	25V
C169	1-164-005-11	CERAMIC CHIP	0.47uF		25V
C171	1-164-222-11	CERAMIC CHIP	0.22uF		25V
C172	1-126-157-11	ELECT	10uF	20%	16V
C173	1-126-163-11	ELECT	4.7uF	20%	50V
C174	1-126-157-11	ELECT	10uF	20%	16V
C175	1-163-031-11	CERAMIC CHIP	0.01uF		50V
C176	1-126-157-11	ELECT	10uF	20%	16V
C177	1-164-182-11	CERAMIC CHIP	0.0033uF	10%	50V

Ref. No.	Part No.	Description			Remark
C179	1-124-638-11	ELECT	22uF	20%	10V
C180	1-163-031-11	CERAMIC CHIP	0.01uF		50V
C181	1-163-133-00	CERAMIC CHIP	470PF	5%	50V
C182	1-126-154-11	ELECT	47uF	20%	6.3V
C185	1-124-638-11	ELECT	22uF	20%	10V
C186	1-163-031-11	CERAMIC CHIP	0.01uF		50V
C187	1-126-157-11	ELECT	10uF	20%	16V
C188	1-126-157-11	ELECT	10uF	20%	16V
C189	1-163-031-11	CERAMIC CHIP	0.01uF		50V
C190	1-163-263-11	CERAMIC CHIP	330PF	5%	50V
C191	1-163-131-00	CERAMIC CHIP	390PF	5%	50V
C193	1-163-031-11	CERAMIC CHIP	0.01uF		50V
C194	1-126-157-11	ELECT	10uF	20%	16V
C195	1-163-237-11	CERAMIC CHIP	27PF	5%	50V
C196	1-163-111-00	CERAMIC CHIP	56PF	5%	50V
C197	1-163-117-00	CERAMIC CHIP	100PF	5%	50V
C198	1-163-109-00	CERAMIC CHIP	47PF	5%	50V
C199	1-163-243-11	CERAMIC CHIP	47PF	5%	50V
C200	1-124-638-11	ELECT	22uF	20%	10V
C203	1-126-157-11	ELECT	10uF	20%	16V
C204	1-126-157-11	ELECT	10uF	20%	16V
C205	1-163-031-11	CERAMIC CHIP	0.01uF		50V
C206	1-163-031-11	CERAMIC CHIP	0.01uF		50V
C207	1-163-038-00	CERAMIC CHIP	0.1uF		25V
C208	1-163-038-00	CERAMIC CHIP	0.1uF		25V
C209	1-163-031-11	CERAMIC CHIP	0.01uF		50V
C210	1-126-157-11	ELECT	10uF	20%	16V
C211	1-126-157-11	ELECT	10uF	20%	16V
C212	1-126-301-11	ELECT	1uF	20%	50V
C213	1-163-031-11	CERAMIC CHIP	0.01uF		50V
C214	1-126-157-11	ELECT	10uF	20%	16V
C215	1-126-157-11	ELECT	10uF	20%	16V
C216	1-163-109-00	CERAMIC CHIP	47PF	5%	50V
C217	1-163-251-11	CERAMIC CHIP	100PF	5%	50V
C218	1-126-157-11	ELECT	10uF	20%	16V
C219	1-163-031-11	CERAMIC CHIP	0.01uF		50V
C220	1-126-157-11	ELECT	10uF	20%	16V
C221	1-163-031-11	CERAMIC CHIP	0.01uF		50V
C222	1-126-154-11	ELECT	47uF	20%	6.3V
C225	1-163-019-00	CERAMIC CHIP	0.0068uF	10%	50V
C226	1-126-301-11	ELECT	1uF	20%	50V
C227	1-126-301-11	ELECT	1uF	20%	50V
C228	1-126-301-11	ELECT	1uF	20%	50V
C229	1-126-157-11	ELECT	10uF	20%	16V
C230	1-163-031-11	CERAMIC CHIP	0.01uF		50V
C231	1-163-093-00	CERAMIC CHIP	10PF	5%	50V
C232	1-163-101-00	CERAMIC CHIP	22PF	5%	50V
C234	1-163-031-11	CERAMIC CHIP	0.01uF		50V
C235	1-163-239-11	CERAMIC CHIP	33PF	5%	50V

Ref. No.	Part No.	Description			Remark
C236	1-163-099-00	CERAMIC CHIP	18PF	5%	50V
C237	1-163-031-11	CERAMIC CHIP	0.01uF		50V
C238	1-163-031-11	CERAMIC CHIP	0.01uF		50V
C239	1-164-182-11	CERAMIC CHIP	0.0033uF	10%	50V
C240	1-163-115-00	CERAMIC CHIP	82PF	5%	50V
C241	1-163-031-11	CERAMIC CHIP	0.01uF		50V
C242	1-163-109-00	CERAMIC CHIP	47PF	5%	50V
C243	1-163-117-00	CERAMIC CHIP	100PF	5%	50V
C244	1-163-031-11	CERAMIC CHIP	0.01uF		50V
C245	1-163-037-11	CERAMIC CHIP	0.022uF	10%	25V
C246	1-163-113-00	CERAMIC CHIP	68PF	5%	50V
C247	1-163-125-00	CERAMIC CHIP	220PF	5%	50V
C249	1-163-113-00	CERAMIC CHIP	68PF	5%	50V
C250	1-163-031-11	CERAMIC CHIP	0.01uF		50V
C251	1-163-121-00	CERAMIC CHIP	150PF	5%	50V
C252	1-163-131-00	CERAMIC CHIP	390PF	5%	50V
C253	1-163-239-11	CERAMIC CHIP	33PF	5%	50V
C255	1-163-113-00	CERAMIC CHIP	68PF	5%	50V
C256	1-163-109-00	CERAMIC CHIP	47PF	5%	50V
C401	1-163-105-00	CERAMIC CHIP	33PF	5%	50V
C402	1-126-154-11	ELECT	47uF	20%	6.3V
C403	1-163-031-11	CERAMIC CHIP	0.01uF		50V
C404	1-163-118-00	CERAMIC CHIP	110PF	5%	50V
C405	1-163-009-11	CERAMIC CHIP	0.001uF	10%	50V
C406	1-124-257-00	ELECT	2.2uF	20%	50V
C408	1-163-131-00	CERAMIC CHIP	390PF	5%	50V
C409	1-131-351-00	TANTALUM	4.7uF	10%	35V
C410	1-163-031-11	CERAMIC CHIP	0.01uF		50V
C411	1-126-301-11	ELECT	1uF	20%	50V
C412	1-163-227-11	CERAMIC CHIP	10PF	5%	50V
C413	1-163-251-11	CERAMIC CHIP	100PF	5%	50V
C414	1-163-031-11	CERAMIC CHIP	0.01uF		50V
C415	1-163-031-11	CERAMIC CHIP	0.01uF		50V
C416	1-163-085-00	CERAMIC CHIP	2PF		50V
C417	1-163-239-11	CERAMIC CHIP	33PF	5%	50V
C418	1-163-031-11	CERAMIC CHIP	0.01uF		50V
C419	1-163-025-11	CERAMIC CHIP	0.001uF		50V
C504	1-126-157-11	ELECT	10uF	20%	16V
C505	1-163-031-11	CERAMIC CHIP	0.01uF		50V
C506	1-126-157-11	ELECT	10uF	20%	16V
C507	1-163-031-11	CERAMIC CHIP	0.01uF		50V
C627	1-163-038-00	CERAMIC CHIP	0.1uF		25V
C628	1-163-038-00	CERAMIC CHIP	0.1uF		25V
C629	1-126-157-11	ELECT	10uF	20%	16V
C630	1-126-157-11	ELECT	10uF	20%	16V
C640	1-124-638-11	ELECT	22uF	20%	10V
C701	1-126-177-11	ELECT	100uF	20%	10V
C702	1-163-035-00	CERAMIC CHIP	0.047uF		50V
C703	1-163-035-00	CERAMIC CHIP	0.047uF		50V
C704	1-126-163-11	ELECT	4.7uF	20%	50V
C705	1-163-038-00	CERAMIC CHIP	0.1uF		25V
C706	1-126-163-11	ELECT	4.7uF	20%	50V
C707	1-164-004-11	CERAMIC CHIP	0.1uF	10%	25V
C708	1-164-004-11	CERAMIC CHIP	0.1uF	10%	25V
C709	1-163-109-00	CERAMIC CHIP	47PF	5%	50V
C710	1-164-004-11	CERAMIC CHIP	0.1uF	10%	25V
C711	1-164-004-11	CERAMIC CHIP	0.1uF	10%	25V
C712	1-163-109-00	CERAMIC CHIP	47PF	5%	50V
C713	1-126-157-11	ELECT	10uF	20%	16V
C714	1-163-031-11	CERAMIC CHIP	0.01uF		50V
C715	1-163-031-11	CERAMIC CHIP	0.01uF		50V
C720	1-126-157-11	ELECT	10uF	20%	16V
		< FILTER >			
CF101	1-579-371-11	FILTER, CERAMIC			
		< CONNECTOR >			
* CN501	1-691-083-11	HOUSING, CONNECTOR 24P			
* CN502	1-691-072-11	HOUSING, CONNECTOR 13P			
CN504	1-568-079-11	CONNECTOR (RECEPTALE) 20P			
* CN508	1-564-679-11	PIN, CONNECTOR 8P			
* CN509	1-695-100-11	PIN, CONNECTOR 12P			
CN511	1-568-089-11	CONNECTOR (PLUG) 12P			
* CN512	1-568-091-11	CONNECTOR (PLUG) 16P			
CN513	1-506-470-11	PIN, CONNECTOR 5P			
		< DIODE >			
D101	8-719-800-76	DIODE	1SS226		
D102	8-719-400-18	DIODE	MA152WK		
D401	8-719-400-18	DIODE	MA152WK		
D402	8-719-400-18	DIODE	MA152WK		
D507	8-719-400-18	DIODE	MA152WK		
		< FILTER >			
FL103	1-236-848-21	FILTER, LOW PASS			
FL104	1-236-849-21	FILTER, BAND PASS			
FL105	1-236-186-11	FILTER, BAND PASS			
FL401	1-239-055-21	FILTER, LOW PASS (CCD. PAL. Y)			
FL402	1-236-188-11	FILTER, BAND PASS			
		< IC >			
IC101	8-752-054-87	IC	CXA1207AQ		
IC102	8-752-333-24	IC	CXL1506M		
IC103	8-752-039-34	IC	CXA1208Q		
IC401	8-752-031-49	IC	CXA1203M		
IC701	8-759-100-96	IC	uPC4558G2		

Ref. No.	Part No.	Description		Remark
		< COIL >		
L101	1-408-978-21	INDUCTOR	47uH	
L102	1-410-072-21	INDUCTOR	820uH	
L103	1-408-985-21	INDUCTOR	180uH	
L107	1-407-169-XX	INDUCTOR	100uH	
L109	1-408-975-21	INDUCTOR	27uH	
L110	1-408-970-21	INDUCTOR	10uH	
L111	1-408-972-21	INDUCTOR	15uH	
L112	1-408-973-21	INDUCTOR	18uH	
L113	1-407-169-XX	INDUCTOR	100uH	
L114	1-408-978-21	INDUCTOR	47uH	
L115	1-408-948-00	INDUCTOR	220uH	
L116	1-408-983-21	INDUCTOR	120uH	
L117	1-408-987-21	INDUCTOR	330uH	
L119	1-408-970-21	INDUCTOR	10uH	
L120	1-408-978-21	INDUCTOR	47uH	
L121	1-408-978-21	INDUCTOR	47uH	
L122	1-408-979-21	INDUCTOR	56uH	
L123	1-408-979-21	INDUCTOR	56uH	
L124	1-408-978-21	INDUCTOR	47uH	
L125	1-408-978-21	INDUCTOR	47uH	
L126	1-410-988-11	INDUCTOR CHIP	0.39uH	
L127	1-410-988-11	INDUCTOR CHIP	0.39uH	
L128	1-410-988-11	INDUCTOR CHIP	0.39uH	
L129	1-410-988-11	INDUCTOR CHIP	0.39uH	
L130	1-410-988-11	INDUCTOR CHIP	0.39uH	
L131	1-410-988-11	INDUCTOR CHIP	0.39uH	
L132	1-410-988-11	INDUCTOR CHIP	0.39uH	
L133	1-408-978-21	INDUCTOR	47uH	
L135	1-408-975-21	INDUCTOR	27uH	
L136	1-407-169-XX	INDUCTOR	100uH	
L137	1-408-966-21	INDUCTOR	4.7uH	
L138	1-407-169-XX	INDUCTOR	100uH	
L139	1-408-984-21	INDUCTOR	150uH	
L140	1-407-169-XX	INDUCTOR	100uH	
L141	1-408-983-21	INDUCTOR	120uH	
L142	1-408-974-21	INDUCTOR	22uH	
L143	1-408-987-21	INDUCTOR	330uH	
L144	1-408-974-21	INDUCTOR	22uH	
L501	1-408-978-21	INDUCTOR	47uH	
L502	1-408-978-21	INDUCTOR	47uH	
L604	1-408-978-21	INDUCTOR	47uH	
L605	1-408-978-21	INDUCTOR	47uH	
		< TRANSISTOR >		
Q101	8-729-101-07	TRANSISTOR	2SB798-DL	
Q102	8-729-421-19	TRANSISTOR	UN2213	
Q104	8-729-422-27	TRANSISTOR	2SD601A-Q	
Q105	8-729-422-27	TRANSISTOR	2SD601A-Q	
Q112	8-729-102-07	TRANSISTOR	2SC2223-F13	
Q114	8-729-422-27	TRANSISTOR	2SD601A-Q	
Q116	8-729-424-18	TRANSISTOR	UN2113	
Q118	8-729-422-27	TRANSISTOR	2SD601A-Q	
Q119	8-729-422-27	TRANSISTOR	2SD601A-Q	
Q120	8-729-403-02	TRANSISTOR	XN4212	
Q121	8-729-402-84	TRANSISTOR	XN4601	
Q123	8-729-422-27	TRANSISTOR	2SD601A-Q	
Q124	8-729-422-36	TRANSISTOR	2SB709A-Q	
Q125	8-729-422-36	TRANSISTOR	2SB709A-Q	
Q126	8-729-422-27	TRANSISTOR	2SD601A-Q	
Q127	8-729-422-27	TRANSISTOR	2SD601A-Q	
Q128	8-729-422-27	TRANSISTOR	2SD601A-Q	
Q129	8-729-403-24	TRANSISTOR	XN4210	
Q130	8-729-422-36	TRANSISTOR	2SB709A-Q	
Q132	8-729-421-19	TRANSISTOR	UN2213	
Q133	8-729-424-08	TRANSISTOR	UN2111	
Q135	8-729-421-19	TRANSISTOR	UN2213	
Q140	8-729-422-27	TRANSISTOR	2SD601A-Q	
Q141	8-729-403-02	TRANSISTOR	XN4212	
Q142	8-729-422-27	TRANSISTOR	2SD601A-Q	
Q143	8-729-422-27	TRANSISTOR	2SD601A-Q	
Q144	8-729-402-81	TRANSISTOR	XN4501	
Q145	8-729-422-36	TRANSISTOR	2SB709A-Q	
Q147	8-729-422-36	TRANSISTOR	2SB709A-Q	
Q148	8-729-422-27	TRANSISTOR	2SD601A-Q	
Q149	8-729-422-27	TRANSISTOR	2SD601A-Q	
Q150	8-729-422-27	TRANSISTOR	2SD601A-Q	
Q151	8-729-420-12	TRANSISTOR	XN4213	
Q152	8-729-422-27	TRANSISTOR	2SD601A-Q	
Q156	8-729-421-19	TRANSISTOR	UN2213	
Q157	8-729-422-36	TRANSISTOR	2SB709A-Q	
Q158	8-729-422-27	TRANSISTOR	2SD601A-Q	
Q159	8-729-424-08	TRANSISTOR	UN2111	
Q401	8-729-422-36	TRANSISTOR	2SB709A-Q	
Q402	8-729-422-27	TRANSISTOR	2SD601A-Q	
Q405	8-729-420-20	TRANSISTOR	XN4312	
Q406	8-729-421-19	TRANSISTOR	UN2213	
Q407	8-729-424-18	TRANSISTOR	UN2113	
Q408	8-729-421-19	TRANSISTOR	UN2213	
Q409	8-729-422-27	TRANSISTOR	2SD601A-Q	
Q410	8-729-402-81	TRANSISTOR	XN4501	
Q509	8-729-420-20	TRANSISTOR	XN4312	
Q609	8-729-402-84	TRANSISTOR	XN4601	
Q610	8-729-402-84	TRANSISTOR	XN4601	
Q611	8-729-422-27	TRANSISTOR	2SD601A-Q	
Q701	8-729-402-81	TRANSISTOR	XN4501	
Q703	8-729-421-90	TRANSISTOR	XN4113	

Ref. No.	Part No.	Description			Remark
Q704	8-729-902-XX	TRANSISTOR	UN2215		
Q705	8-729-422-54	TRANSISTOR	XN4215		
Q706	8-729-422-54	TRANSISTOR	XN4215		
		< RESISTOR >			
R101	1-216-073-00	METAL CHIP	10K	5%	1/10W
R102	1-216-065-00	METAL CHIP	4.7K	5%	1/10W
R104	1-216-295-00	METAL CHIP	0	5%	1/10W
R105	1-216-081-00	METAL CHIP	22K	5%	1/10W
R106	1-216-081-00	METAL CHIP	22K	5%	1/10W
R107	1-216-049-00	METAL CHIP	1K	5%	1/10W
R108	1-216-049-00	METAL CHIP	1K	5%	1/10W
R109	1-216-029-00	METAL CHIP	150	5%	1/10W
R110	1-216-069-00	METAL CHIP	6.8K	5%	1/10W
R111	1-216-077-00	METAL CHIP	15K	5%	1/10W
R112	1-216-049-00	METAL CHIP	1K	5%	1/10W
R113	1-216-043-00	METAL CHIP	560	5%	1/10W
R114	1-216-035-00	METAL CHIP	270	5%	1/10W
R115	1-216-295-00	METAL CHIP	0	5%	1/10W
R126	1-216-081-00	METAL CHIP	22K	5%	1/10W
R127	1-216-081-00	METAL CHIP	22K	5%	1/10W
R128	1-216-033-00	METAL CHIP	220	5%	1/10W
R129	1-216-021-00	METAL CHIP	68	5%	1/10W
R130	1-216-071-00	METAL CHIP	8.2K	5%	1/10W
R131	1-216-043-00	METAL CHIP	560	5%	1/10W
R132	1-216-045-00	METAL CHIP	680	5%	1/10W
R134	1-216-053-00	METAL CHIP	1.5K	5%	1/10W
R135	1-216-295-00	METAL CHIP	0	5%	1/10W
R136	1-216-081-00	METAL CHIP	22K	5%	1/10W
R137	1-216-081-00	METAL CHIP	22K	5%	1/10W
R138	1-216-049-00	METAL CHIP	1K	5%	1/10W
R139	1-216-039-00	METAL CHIP	390	5%	1/10W
R141	1-216-053-00	METAL CHIP	1.5K	5%	1/10W
R142	1-216-295-00	METAL CHIP	0	5%	1/10W
R143	1-216-073-00	METAL CHIP	10K	5%	1/10W
R144	1-216-033-00	METAL CHIP	220	5%	1/10W
R145	1-216-033-00	METAL CHIP	220	5%	1/10W
R147	1-216-037-00	METAL CHIP	330	5%	1/10W
R148	1-216-043-00	METAL CHIP	560	5%	1/10W
R149	1-216-047-00	METAL CHIP	820	5%	1/10W
R150	1-216-045-00	METAL CHIP	680	5%	1/10W
R151	1-216-065-00	METAL CHIP	4.7K	5%	1/10W
R154	1-216-049-00	METAL CHIP	1K	5%	1/10W
R155	1-216-049-00	METAL CHIP	1K	5%	1/10W
R156	1-216-295-00	METAL CHIP	0	5%	1/10W
R157	1-216-041-00	METAL CHIP	470	5%	1/10W
R158	1-216-041-00	METAL CHIP	470	5%	1/10W
R160	1-216-065-00	METAL CHIP	4.7K	5%	1/10W
R161	1-216-063-00	METAL CHIP	3.9K	5%	1/10W
R162	1-216-043-00	METAL CHIP	560	5%	1/10W
R163	1-216-043-00	METAL CHIP	560	5%	1/10W
R176	1-216-295-00	METAL CHIP	0	5%	1/10W
R177	1-216-081-00	METAL CHIP	22K	5%	1/10W
R178	1-216-081-00	METAL CHIP	22K	5%	1/10W
R179	1-216-041-00	METAL CHIP	470	5%	1/10W
R180	1-216-041-00	METAL CHIP	470	5%	1/10W
R182	1-216-041-00	METAL CHIP	470	5%	1/10W
R183	1-216-041-00	METAL CHIP	470	5%	1/10W
R184	1-216-025-00	METAL CHIP	100	5%	1/10W
R185	1-216-047-00	METAL CHIP	820	5%	1/10W
R186	1-216-047-00	METAL CHIP	820	5%	1/10W
R187	1-216-083-00	METAL CHIP	27K	5%	1/10W
R190	1-216-073-00	METAL CHIP	10K	5%	1/10W
R191	1-216-073-00	METAL CHIP	10K	5%	1/10W
R192	1-216-057-00	METAL CHIP	2.2K	5%	1/10W
R193	1-216-089-00	METAL CHIP	47K	5%	1/10W
R194	1-216-073-00	METAL CHIP	10K	5%	1/10W
R195	1-216-073-00	METAL CHIP	10K	5%	1/10W
R196	1-216-049-00	METAL CHIP	1K	5%	1/10W
R197	1-216-049-00	METAL CHIP	1K	5%	1/10W
R198	1-216-049-00	METAL CHIP	1K	5%	1/10W
R202	1-216-089-00	METAL CHIP	47K	5%	1/10W
R204	1-216-049-00	METAL CHIP	1K	5%	1/10W
R205	1-216-049-00	METAL CHIP	1K	5%	1/10W
R206	1-216-295-00	METAL CHIP	0	5%	1/10W
R207	1-216-699-11	METAL CHIP	100K	0.5%	1/10W
R208	1-216-113-00	METAL CHIP	470K	5%	1/10W
R209	1-216-121-00	METAL CHIP	1M	5%	1/10W
R212	1-216-049-00	METAL CHIP	1K	5%	1/10W
R213	1-216-049-00	METAL CHIP	1K	5%	1/10W
R215	1-216-081-00	METAL CHIP	22K	5%	1/10W
R216	1-216-081-00	METAL CHIP	22K	5%	1/10W
R218	1-216-071-00	METAL CHIP	8.2K	5%	1/10W
R219	1-216-059-00	METAL CHIP	2.7K	5%	1/10W
R220	1-216-071-00	METAL CHIP	8.2K	5%	1/10W
R221	1-216-653-11	METAL CHIP	1.2K	0.5%	1/10W
R222	1-216-643-11	METAL CHIP	470	0.5%	1/10W
R223	1-216-295-00	METAL CHIP	0	5%	1/10W
R229	1-216-079-00	METAL CHIP	18K	5%	1/10W
R230	1-216-083-00	METAL CHIP	27K	5%	1/10W
R231	1-216-663-11	METAL CHIP	3.3K	0.5%	1/10W
R232	1-216-049-00	METAL CHIP	1K	5%	1/10W
R233	1-216-035-00	METAL CHIP	270	5%	1/10W
R234	1-216-065-00	METAL CHIP	4.7K	5%	1/10W
R235	1-216-047-00	METAL CHIP	820	5%	1/10W
R236	1-216-047-00	METAL CHIP	820	5%	1/10W
R237	1-216-047-00	METAL CHIP	820	5%	1/10W
R238	1-216-041-00	METAL CHIP	470	5%	1/10W

Ref. No.	Part No.	Description			Remark
R239	1-216-041-00	METAL CHIP	470	5%	1/10W
R240	1-216-041-00	METAL CHIP	470	5%	1/10W
R241	1-216-051-00	METAL CHIP	1.2K	5%	1/10W
R243	1-216-035-00	METAL CHIP	270	5%	1/10W
R244	1-216-081-00	METAL CHIP	22K	5%	1/10W
R245	1-216-049-00	METAL CHIP	1K	5%	1/10W
R246	1-216-039-00	METAL CHIP	390	5%	1/10W
R247	1-216-039-00	METAL CHIP	390	5%	1/10W
R248	1-216-049-00	METAL CHIP	1K	5%	1/10W
R249	1-216-295-00	METAL CHIP	0	5%	1/10W
R251	1-216-095-00	METAL CHIP	82K	5%	1/10W
R252	1-216-049-00	METAL CHIP	1K	5%	1/10W
R253	1-216-121-00	METAL CHIP	1M	5%	1/10W
R257	1-216-085-00	METAL CHIP	33K	5%	1/10W
R258	1-216-091-00	METAL CHIP	56K	5%	1/10W
R259	1-216-041-00	METAL CHIP	470	5%	1/10W
R260	1-216-049-00	METAL CHIP	1K	5%	1/10W
R261	1-216-049-00	METAL CHIP	1K	5%	1/10W
R262	1-216-057-00	METAL CHIP	2.2K	5%	1/10W
R263	1-216-057-00	METAL CHIP	2.2K	5%	1/10W
R264	1-216-041-00	METAL CHIP	470	5%	1/10W
R265	1-216-041-00	METAL CHIP	470	5%	1/10W
R266	1-216-057-00	METAL CHIP	2.2K	5%	1/10W
R269	1-216-065-00	METAL CHIP	4.7K	5%	1/10W
R270	1-216-065-00	METAL CHIP	4.7K	5%	1/10W
R271	1-216-065-00	METAL CHIP	4.7K	5%	1/10W
R272	1-216-061-00	METAL CHIP	3.3K	5%	1/10W
R273	1-216-699-11	METAL CHIP	100K	0.5%	1/10W
R274	1-216-049-00	METAL CHIP	1K	5%	1/10W
R275	1-216-063-00	METAL CHIP	3.9K	5%	1/10W
R276	1-216-067-00	METAL CHIP	5.6K	5%	1/10W
R277	1-216-041-00	METAL CHIP	470	5%	1/10W
R278	1-216-057-00	METAL CHIP	2.2K	5%	1/10W
R279	1-216-071-00	METAL CHIP	8.2K	5%	1/10W
R280	1-216-063-00	METAL CHIP	3.9K	5%	1/10W
R281	1-216-069-00	METAL CHIP	6.8K	5%	1/10W
R282	1-216-061-00	METAL CHIP	3.3K	5%	1/10W
R285	1-216-057-00	METAL CHIP	2.2K	5%	1/10W
R291	1-216-025-00	METAL CHIP	100	5%	1/10W
R292	1-216-051-00	METAL CHIP	1.2K	5%	1/10W
R293	1-216-055-00	METAL CHIP	1.8K	5%	1/10W
R294	1-216-055-00	METAL CHIP	1.8K	5%	1/10W
R296	1-216-049-00	METAL CHIP	1K	5%	1/10W
R297	1-216-065-00	METAL CHIP	4.7K	5%	1/10W
R299	1-216-065-00	METAL CHIP	4.7K	5%	1/10W
R300	1-216-025-00	METAL CHIP	100	5%	1/10W
R301	1-216-057-00	METAL CHIP	2.2K	5%	1/10W
R302	1-216-057-00	METAL CHIP	2.2K	5%	1/10W
R303	1-216-295-00	METAL CHIP	0	5%	1/10W

Ref. No.	Part No.	Description			Remark
R304	1-216-295-00	METAL CHIP	0	5%	1/10W
R306	1-216-049-00	METAL CHIP	1K	5%	1/10W
R307	1-216-051-00	METAL CHIP	1.2K	5%	1/10W
R308	1-216-041-00	METAL CHIP	470	5%	1/10W
R311	1-216-049-00	METAL CHIP	1K	5%	1/10W
R312	1-216-295-00	METAL CHIP	0	5%	1/10W
R313	1-216-073-00	METAL CHIP	10K	5%	1/10W
R315	1-216-065-00	METAL CHIP	4.7K	5%	1/10W
R320	1-216-295-00	METAL CHIP	0	5%	1/10W
R322	1-216-043-00	METAL CHIP	560	5%	1/10W
R323	1-216-063-00	METAL CHIP	3.9K	5%	1/10W
R324	1-216-295-00	METAL CHIP	0	5%	1/10W
R325	1-216-049-00	METAL CHIP	1K	5%	1/10W
R326	1-216-057-00	METAL CHIP	2.2K	5%	1/10W
R327	1-216-063-00	METAL CHIP	3.9K	5%	1/10W
R401	1-216-085-00	METAL CHIP	33K	5%	1/10W
R402	1-216-091-00	METAL CHIP	56K	5%	1/10W
R403	1-216-041-00	METAL CHIP	470	5%	1/10W
R404	1-216-059-00	METAL CHIP	2.7K	5%	1/10W
R405	1-216-049-00	METAL CHIP	1K	5%	1/10W
R406	1-216-057-00	METAL CHIP	2.2K	5%	1/10W
R407	1-216-057-00	METAL CHIP	2.2K	5%	1/10W
R408	1-216-057-00	METAL CHIP	2.2K	5%	1/10W
R411	1-216-295-00	METAL CHIP	0	5%	1/10W
R412	1-216-071-00	METAL CHIP	8.2K	5%	1/10W
R413	1-216-089-00	METAL CHIP	47K	5%	1/10W
R414	1-216-061-00	METAL CHIP	3.3K	5%	1/10W
R415	1-216-097-00	METAL CHIP	100K	5%	1/10W
R416	1-216-065-00	METAL CHIP	4.7K	5%	1/10W
R417	1-216-065-00	METAL CHIP	4.7K	5%	1/10W
R418	1-216-097-00	METAL CHIP	100K	5%	1/10W
R419	1-216-057-00	METAL CHIP	2.2K	5%	1/10W
R420	1-216-049-00	METAL CHIP	1K	5%	1/10W
R421	1-216-049-00	METAL CHIP	1K	5%	1/10W
R422	1-216-097-00	METAL CHIP	100K	5%	1/10W
R423	1-216-097-00	METAL CHIP	100K	5%	1/10W
R424	1-216-097-00	METAL CHIP	100K	5%	1/10W
R425	1-216-049-00	METAL CHIP	1K	5%	1/10W
R426	1-216-049-00	METAL CHIP	1K	5%	1/10W
R427	1-216-057-00	METAL CHIP	2.2K	5%	1/10W
R428	1-216-085-00	METAL CHIP	33K	5%	1/10W
R429	1-216-065-00	METAL CHIP	4.7K	5%	1/10W
R430	1-216-085-00	METAL CHIP	33K	5%	1/10W
R431	1-216-081-00	METAL CHIP	22K	5%	1/10W
R432	1-216-049-00	METAL CHIP	1K	5%	1/10W
R433	1-216-041-00	METAL CHIP	470	5%	1/10W
R434	1-216-057-00	METAL CHIP	2.2K	5%	1/10W
R435	1-216-295-00	METAL CHIP	0	5%	1/10W
R511	1-216-295-00	METAL CHIP	0	5%	1/10W

Ref. No.	Part No.	Description			Remark
R517	1-216-077-00	METAL CHIP	15K	5%	1/10W
R518	1-216-077-00	METAL CHIP	15K	5%	1/10W
R519	1-216-070-00	METAL CHIP	7.5K	5%	1/10W
R520	1-216-295-00	METAL CHIP	0	5%	1/10W
R521	1-216-295-00	METAL CHIP	0	5%	1/10W
R525	1-216-295-00	METAL CHIP	0	5%	1/10W
R526	1-216-043-00	METAL CHIP	560	5%	1/10W
R527	1-216-057-00	METAL CHIP	2.2K	5%	1/10W
R528	1-216-043-00	METAL CHIP	560	5%	1/10W
R529	1-216-057-00	METAL CHIP	2.2K	5%	1/10W
R530	1-216-049-00	METAL CHIP	1K	5%	1/10W
R531	1-216-295-00	METAL CHIP	0	5%	1/10W
R532	1-216-295-00	METAL CHIP	0	5%	1/10W
R536	1-216-295-00	METAL CHIP	0	5%	1/10W
R537	1-216-295-00	METAL CHIP	0	5%	1/10W
R538	1-216-295-00	METAL CHIP	0	5%	1/10W
R636	1-216-295-00	METAL CHIP	0	5%	1/10W
R637	1-216-081-00	METAL CHIP	22K	5%	1/10W
R638	1-216-025-00	METAL CHIP	100	5%	1/10W
R639	1-216-057-00	METAL CHIP	2.2K	5%	1/10W
R640	1-216-057-00	METAL CHIP	2.2K	5%	1/10W
R641	1-216-309-00	METAL CHIP	5.6	5%	1/10W
R642	1-216-309-00	METAL CHIP	5.6	5%	1/10W
R643	1-216-021-00	METAL CHIP	68	5%	1/10W
R644	1-216-021-00	METAL CHIP	68	5%	1/10W
R645	1-216-049-00	METAL CHIP	1K	5%	1/10W
R646	1-216-051-00	METAL CHIP	1.2K	5%	1/10W
R647	1-216-057-00	METAL CHIP	2.2K	5%	1/10W
R649	1-216-295-00	METAL CHIP	0	5%	1/10W
R701	1-216-037-00	METAL CHIP	330	5%	1/10W
R702	1-216-065-00	METAL CHIP	4.7K	5%	1/10W
R703	1-216-065-00	METAL CHIP	4.7K	5%	1/10W
R704	1-216-065-00	METAL CHIP	4.7K	5%	1/10W
R705	1-216-065-00	METAL CHIP	4.7K	5%	1/10W
R706	1-216-089-00	METAL CHIP	47K	5%	1/10W
R707	1-216-083-00	METAL CHIP	27K	5%	1/10W
R708	1-216-057-00	METAL CHIP	2.2K	5%	1/10W
R709	1-216-049-00	METAL CHIP	1K	5%	1/10W
R710	1-216-097-00	METAL CHIP	100K	5%	1/10W
R711	1-216-073-00	METAL CHIP	10K	5%	1/10W
R712	1-216-073-00	METAL CHIP	10K	5%	1/10W
R713	1-216-073-00	METAL CHIP	10K	5%	1/10W
R714	1-216-070-00	METAL CHIP	7.5K	5%	1/10W
R715	1-216-109-00	METAL CHIP	330K	5%	1/10W
R716	1-216-077-00	METAL CHIP	15K	5%	1/10W
R717	1-216-073-00	METAL CHIP	10K	5%	1/10W
R718	1-216-073-00	METAL CHIP	10K	5%	1/10W
R719	1-216-073-00	METAL CHIP	10K	5%	1/10W
R720	1-216-073-00	METAL CHIP	10K	5%	1/10W

Ref. No.	Part No.	Description			Remark
R721	1-216-070-00	METAL CHIP	7.5K	5%	1/10W
R722	1-216-109-00	METAL CHIP	330K	5%	1/10W
R723	1-216-077-00	METAL CHIP	15K	5%	1/10W
R724	1-216-073-00	METAL CHIP	10K	5%	1/10W
R726	1-216-295-00	METAL CHIP	0	5%	1/10W
R734	1-216-295-00	METAL CHIP	0	5%	1/10W
R745	1-216-065-00	METAL CHIP	4.7K	5%	1/10W
R746	1-216-089-00	METAL CHIP	47K	5%	1/10W

< VARIABLE RESISTOR >

RV101	1-238-088-11	RES, ADJ, CERMET	2.2K
RV102	1-238-086-11	RES, ADJ, CERMET	470
RV103	1-238-091-11	RES, ADJ, CERMET	22K
RV105	1-238-092-11	RES, ADJ, CERMET	47K
RV106	1-238-091-11	RES, ADJ, CERMET	22K
RV107	1-238-088-11	RES, ADJ, CERMET	2.2K
RV108	1-238-089-11	RES, ADJ, CERMET	4.7K
RV109	1-238-088-11	RES, ADJ, CERMET	2.2K
RV111	1-238-086-11	RES, ADJ, CERMET	470
RV112	1-238-086-11	RES, ADJ, CERMET	470
RV401	1-238-089-11	RES, ADJ, CERMET	4.7K
RV402	1-238-090-11	RES, ADJ, CERMET	10K

< SWITCH >

S501	1-554-088-00	SWITCH, KEY BOARD (CL)

< VIBRATOR >

X101	1-577-117-21	OSCILLATOR, CRYSTAL 4.433619MHz

****

Ref. No.	Part No.	Description	Remark
		MISCELLANEOUS	
		************	
11	1-696-411-12	CABLE, FLAT (FFT-8) 18P	
12	1-960-799-11	CABLE, FLAT (FFT-3) 18P	
52	1-569-346-11	CONNECTOR, FPC (TRANSLATION) 10P	
53	1-643-189-11	FP-503 FLEXIBLE BOARD	
65	1-690-805-11	CABLE, FLAT (FCS-3) 15P	
66	1-690-803-11	CABLE, FLAT (FRS-9) 13P	
67	1-643-188-11	FP-502 FLEXIBLE BOARD	
69	1-569-347-11	CONNECTOR, FPC (TRANSLATION) 13P	
70	1-690-801-11	CABLE, FLAT (FSV-1) 24P	
71	1-690-042-11	CABLE, FLAT (FSV-4) 13P	
⚠102	9-903-247-01	AC INLET	
⚠107	1-466-328-31	MODULATOR, RF (RFU-2027)	
114	1-413-743-11	POWER BLOCK (AEP)	
114	1-413-767-11	POWER BLOCK (UK)	
276	1-628-061-12	FP-90 FLEXIBLE BOARD	
277	1-628-060-12	FP-89 FLEXIBLE BOARD	
286	1-572-173-11	SWITCH, SLIDE (ENCODER)	
⚠F101	9-903-217-01	FUSE 2A 250V (UK)	
M901	A-7048-591-A	DRUM ASSY (DGU-63B-R)	
M902	8-835-331-31	MOTOR, DC U-22A (CAPSTAN)	
M903	A-7040-290-A	MOTOR ASSY, THREADING (LOADING)	
M904	X-3731-108-1	FL MOTOR ASSY	
**********			
		ACCESSORIES & PACKING MATERIALS	
		******************************	
	1-551-513-00	CORD, CONNECTION	
⚠	1-574-056-11	CORD, POWER (AEP, E)	
⚠	1-590-866-21	CORD, POWER (UK)	
	1-693-136-11	REMOTE COMMANDER (RMT-V124)	
	3-695-308-01	DRIVER, VOLUME	
	3-755-409-11	MANUAL, INSTRUCTION (ENGLISH) (AEP, UK)	
	3-755-409-41	MANUAL, INSTRUCTION (GERMAN, FRENCH, SPANISH) (AEP)	
	3-755-409-51	MANUAL, INSTRUCTION (DUTCH, SWEDISH, ITALIAN) (AEP)	
	3-755-409-81	MANUAL, INSTRUCTION (ENGLISH) (E)	
*	3-947-296-21	INDIVIDUAL CARTON (AEP, UK)	
*	3-947-296-61	INDIVIDUAL CARTON (E)	
*	3-947-297-01	CUSHION (RIGHT)	
*	3-947-298-01	CUSHION (LEFT)	
**********			

Ref. No.	Part No.	Description	Remark
		************************	
		HARDWARE LIST	
		************************	
#1	7-627-553-37	SCREW (M2X3), SPECIAL HEAD	
#2	7-627-555-88	SCREW (M1.4X1.8)	
#3	7-621-772-10	SCREW +B 2X4	
#4	7-627-553-68	SCREW, PRECISION +P 2X6 TYPE3	

The components identified by mark ⚠ or dotted line with mark. ⚠ are critical for safety. Replace only with part number specified.

SECTION 8
SERVICE MODE

☆This unit uses the EVR (Electronic Variable Resistor) for performing adjustments and tests. These functions are implemented by the SENSER LANC system.

8-1. SENSER LANC

SENSER LANC is the LANC format designed to perform EVR (electronic variable resistor) adjustments and various tests for this 8mm VTR by using the LANC (Control L). The SENSER LANC is synonymous with the old SERVICE LANC. But there have been enhancements and the SENSER LANC is now used as a unified word.

8-2. HOW TO USE THE RM-95 JIG (ADJUSTMENT REMOTE CONTROL)

The RM-95 jig is used to operate the SENSER LANC. This jig will create the SENSER LANC Mode. Because of this, the HOLD switch has been modified for service purpose.

Note that the old models of the RM-95 have no page display function and it is needed to replace their microcomputers within these old models.

Old	UPD7503G-A71-12 UPD7503G-C23-12	8-759-142-56 8-759-146-77	No Page display (The microcomputer must be replaced.)
New	UPD7503G-C56-12	8-759-148-35	Page display

LCD Display of RM-95

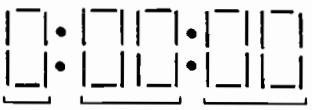

Page Data Address

Example

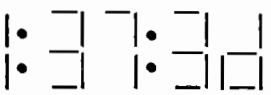

This means that the data on page 1, address 3D is 37.

8-3. HOW TO CHANGE THE SERVICE MODE WITH RM-95

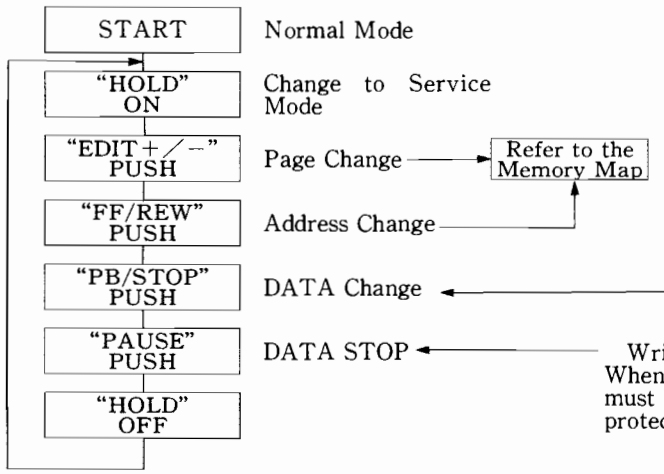

LCD Display (Hexadecimal form) P : DD : AA (F : 00 : 00) ← Display Data

The data at the selected address will be displayed. The page entered first from Normal mode is 0.

P : 00 : 00 ← If a selected page is not incorporated, the preset data value will be indefinite. When a change is made within an incorporated page, the address will remain intact.

P : DD : AA

<When ADJ Data Has Been Changed>
The EVR value (RAM) will be renewed by changed data. (This data will not be written to EE PROM.)

Write to EE PROM.
When writing changed data to EEPROM, WRITE PROTECT must be released before it cannot be written. To release this protect, the data on page 0, address 00 must be set to 01 first.

Command	Action	RM-95 Control Button Pushed
Page Up	Page+1	Edit Search+
Page Down	Page−1	Edit Search−
Direct Page Set	Sets to specified page.	Event Clear
Address Up	Address+1	Fast Forward
Address Down	Address−1	Rewind
Data Up	Data+1	Play Back
Data Down	Data−1	Stop
Store	Writes data to EEPROM. RAM	Pause

RM-95 (J-6082-053-B)

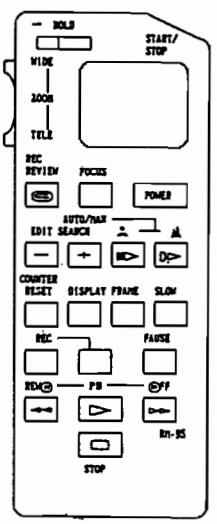

8-4. SENSER LANC MEMORY MAP

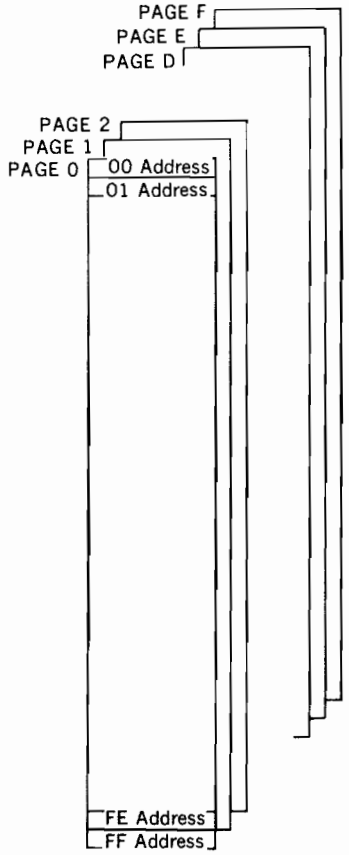

This unit has pages 0 to F allocated as listed below.

PAGE	Page Allocation
0	Service
1	
2	System Controler
3	System Controler
4	System Controler
5	
6	
7	Timer/Tuner Controler
8	Timer/Tuner Controler
9	Timer/Tuner Controler
A	
B	
C	
D	
E	
F	

Note : This set has no EE-PROM built-in and so it has no "D page"

8-5. TEST MODE SETTING

Variety of test modes are established and changed as listed below.

Page 0	Address 02

Data	Function
00	Normal
01	Test Mode 1 Various Emergencies, Inhibit and Release Drum, Capstan, Loading Motor, Reel, Tape Top and End, DEW SP/LP Automatic Discrimination Inhibit, Manual Changeover
02	Test Mode 2 • Playback Frequency Characteristic 1'ch Adjustment With the ATF servo shifted one track, playback tape and allow taking RF on 1 channel. (This is valid only in playback mode.) SP/LP is protected from being distinguished and REC SP/LP followed.
03	Test Mode 3 Track Shift Playback • With a forward shift of 1/3 to 1/4 track, playback tape. (This is valid only in playback mode.) SP/LP is protected from being distinguished and REC SP/LP is followed.

* After completing necessary adjustments/repairs, be sure to return the data at this address to 00.

8-6. EMERGENCY CODES

These codes can be used to check the condition of failure (abnormality) that occurred.

Page 0	Address 07

Last Emergency Code

.... The code of the last failure that occurred (This data will be renewed each time a failure occurs.

* When the RESET button on the main body is pressed and when the AC power is disconnected, the emergency code data will be reset to "00".

Code	Condition of Failure
00	No Failure
01	Loading Motor Failure
02	Reel Failure during Unloading
03	Reel Failure during operation other than unloading
04	Capstan Failure
05	FG Failure at Start of Drum
06	PG no Failure at Start of Drum
07	FG Failure when Drum is Stationary
08	FG Failure at Start of Drum during loading
09	PG no Failure at Start of Drum during loading
0A	FG Failure when Drum is Stationary during loading
0B	FG Failure at Start of Drum during unloading
0C	PG no Failure at Start of Drum during unloading
0D	FG Failure when Drum is Stationary during unloading

8-7. EMERGENCY MODE

This mode allows you to check the mode of operation in which the VTR was placed when failure occurred.

Page 0	Address 09

Last Emergency Code

.... The code of the last failure that occurred
(This data will be renewed each time a failure occurs.)

* When the RESET button on the main body is pressed and when the AC power is disconnected, the emergency code data will be reset to "00".

Code	Condition of Failure
10	EJECTED
20	STOP
26	STOP TAPE END
27	STOP TAPE TOP
29	STOP ZERO
30	FF
33	FF ZERO PB
34	FF ZERO STOP
38	REW
3A	REW PB
3B	REW ZERO PB
3C	REW ZERO STOP
40	REC
41	REC PAUSE
42	TIMER REC
43	TIMER REC PAUSE
48	A INSERT
49	A INSERT PAUSE
60	PB
62	+1
63	−1
64	CUE
65	REVIEW
66	+2
67	−1
68	LOCKED CUE
69	LOCKED REVIEW
70	+STILL
71	−STILL
72	+SLOW, +SLOW 1/5
73	−SLOW, −SLOW 1/5
74	+SLOW 1/10
75	−SLOW 1/10
76	+FRAME
77	−FRAME

8-8. RF SWITCHING POSITION ADJUSTMENT MODE

When adjusting the RF switching position, set up as follows:

Page 7	Address 80

Data	Function
00	Normal
05	Switching position adjustment mode

8-9. DETERMINATION OF BIT VALUE

For the following items, the data displayed on the adjustment remote control is used to determine the bit ralue. The list below should be checked to determine whether the bit value is "1" or "0".

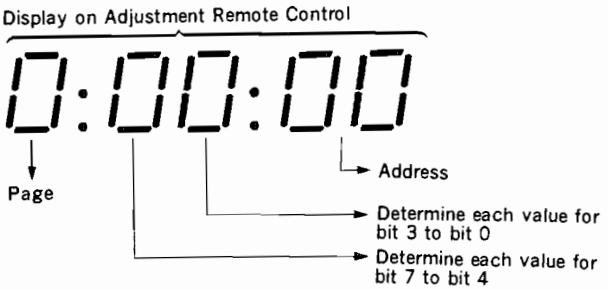

	Display on Remote Control	Bit Value			
		bit3 or bit7	bit2 or bit6	bit1 or bit5	bit0 or bit4
	0	0	0	0	0
	1	0	0	0	1
	2	0	0	1	0
	3	0	0	1	1
	4	0	1	0	0
	5	0	1	0	1
	6	0	1	1	0
	7	0	1	1	1
Ⓐ→	8	1	0	0	0

Display on Remote Control	Bit Value			
	bit3 or bit7	bit2 or bit6	bit1 or bit5	bit0 or bit4
9	1	0	0	1
A (⊓)	1	0	1	0
B (⊔)	1	0	1	1
C (⊏)	1	1	0	0
D (⊐)	1	1	0	1
Ⓑ→ E (⊑)	1	1	1	0
F (⊒)	1	1	1	1

(Example) If the data displayed on the remote control is "8E", the values for bit 7 to bit 4 can be determined from the values in the column Ⓐ. The value for bit 3 to bit 0 can be determined from the values in the column Ⓑ.

8-10. O PAGE MEMORY MAP

Adjustment Address	Contents	Remarks
00	Not used	
01	Not used	
02	Test Mode (COSMO)	
03	Switching Position Data (LOW)	Read only
04	Switching Position Data (HIGH)	Read only
05		
06		
07	Emergency Code (LAST)	
08		
09	Emergency Mode (LAST)	
0A		
0B		
0C		
0D		
0E		
0F		

SECTION 9
MECHANICAL ADJUSTMENTS

For Mechanical Adjustments

For the procedures how to adjust and check the mechanism, as well as how to replace mechanical parts, refer to the separate 8mm Video Mechanical Adjustment Manual III (9-972-732-01).

However, for the procedures how to set the Track Shift mode, refer to the following text.

9-1. TAPE PASS ADJUSTMENT

(TRACK SHIFT)

The 8mm Video Tape Recorder system uses the AFT (Automatic Track Finding) function in which four different pilot signals are used for controlling the tape speed instantaneously to provide high precision tracking. This eliminates the Tracking Adjustment control, thus allowing accurate tracing.

In spite of its advantageous feature, the AFT system may have a difficulty in adjusting the tape pass system. The ATF will automatically corrects tracing even if the head has only a little tracing distortion. This may make it impossible to perform a complete adjustment.

Therefore, when performing a fine adjustment for tracking, the Track Shift mode should be entered before starting this adjustment. This mode will force to operate the ATF to shift the amount of tracking by a given quantity (approximately 1/4), so that tracking can be easily fine adjusted. Furthermore, no track shift jig is needed.

9-1-1. Setting the Track Shift Mode

1) Place the adjustment remote control RM-95 (J-6082-053-B) in the HOLD ON position.
2) Operate the EDIT +/— button to select adjustment page 07.
3) Operate the FF/REW button to select adjustment address 0C.
4) Operate the PB/STOP button to set to adjustment data 03. (This will go to the Test Mode 3 (Pass Adjustment).)

Note 1 : For details of the Test Mode, refer to "SECTION 8. SERVICE MODE."

Note 2 : If the LP mode is recognized by the system wrongly, operate the Recording Time SP/LP button to enter the SP mode.

Note 3 : After adjustment, operate the PB/STOP button to reset to adjustment data 00. Place the remote control in the HOLD OFF position to return to the normal mode.

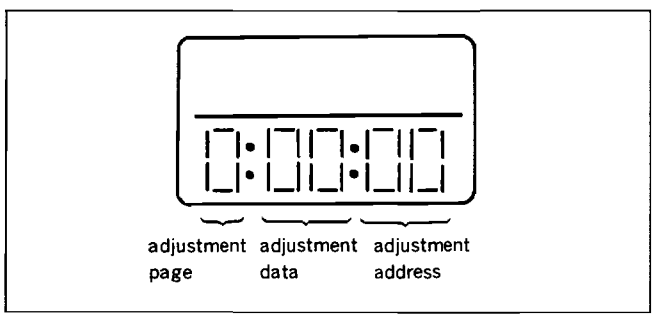

Fig. 9-1.

9-1-2. Preparation before Adjustment

1) Clean the surfaces over which tape moves past (of the tape guides, drum, capstan shaft and pinch rollers).
2) Oscilloscope Connection and Waveform Output:
   1 ch: Drum head's RF signal output, RP-159 board CN003 pin ③ (PB RF)
   External trigger input: RP-159 board CN003 pin ④ (RF SWP)
   GND: RP-159 board CN003 pin ② (GND)
3) Play back alignment tape for tracking (WR5-1CP).
4) Check that RF waveform observed on the oscilloscope is flat on both entrance and exit sides.
   If not flat, perform necessary adjustment according to the separate 8 mm Video Mechanical Adjustment III.

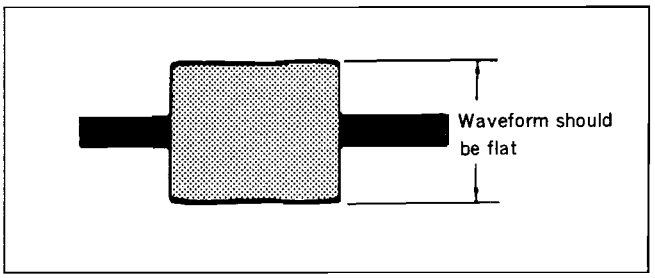

Fig. 9-2.

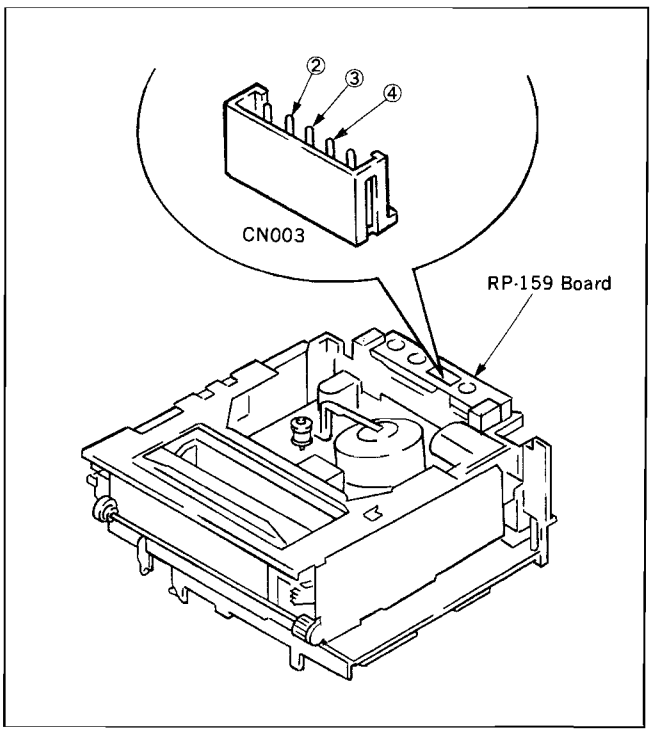

Fig. 9-3.

SECTION 10
ELECTRICAL ADJUSTMENTS

See the adjusting part location diagram from on page 148 for the adjustment.

For details of the SENSER LANC , refer to "SECTION 8. SERVICE MODE".

10-1. PREPARATION BEFORE ADJUSTMENT

10-1-1. Equipment Required

The measuring instruments used for this alignment include :

1) Monitor TV
2) Oscilloscope, dual-trace, bandwidth of 30MHz or more, with delay mode (A probe 10:1 should be used unless otherwise specified.)
3) Frequency counter
4) Pattern generator (with Video Output terminal; refer to Section 10-1-2. Equipment Connection.)
5) Digital voltmeter
6) Audio generator
7) Audio level meter
8) Audio distortion meter
9) Audio attenuator
10) Vector scope
11) Alignment tapes
   - For tracking adjustment (WR5-1CP)
     Part No.: 8-967-995-07
   - For video frequency adjustment (WR5-6C)
     Part No.: 8-967-995-17
   - For operation check
     For SP (WR5-5CSP)
     Part No.: 8-967-995-46
     or (WR5-4CSP)
     Part No.: 8-967-995-47
     For LP (WR5-4CL)
     Part No.: 8-967-995-56
   - For AFM stereo operation check (WR5-9CS)
     Part No.: 8-967-995-28
12) Adjustment remote control (J-6082-053-B)

10-1-2. Equipment Connection

Unless otherwise specified, connect and adjust the measuring instruments as shown is the following diagram.

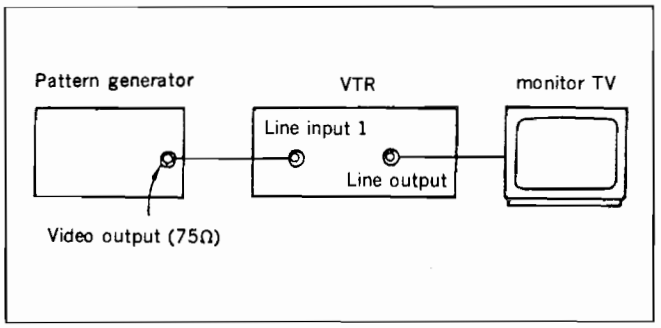

Fig. 10-1.

- Make adjustment with the switches set to the following positions :
  INPUT SELECT....LINE

10-1-3. Input Signal Check

In this adjustment, NTSC pattern generator is connected with LINE 1 input signal terminal. When check to tuner, connected VHF antenna terminal. Check that the amplitudes of video signal SYNC signal, of picture portions, and of burst signals are flat at approximately 0.3, 0.7 and 0.3V, respectively, and that the level ratio of the burst signal and "red" signal are 0.30 : 0.66. Fig. 10-2. shows video signals (color bars) used in adjusting the video section.

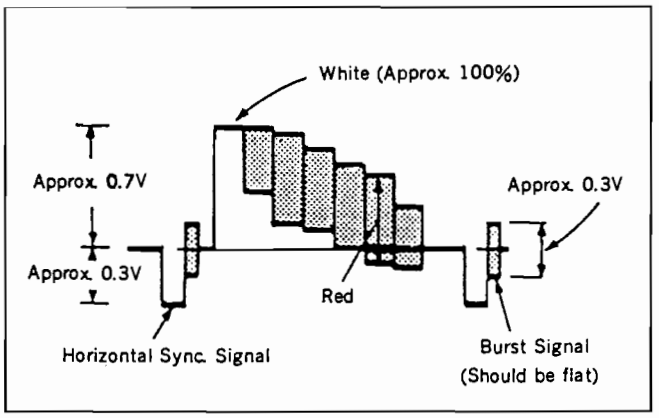

Fig. 10-2.

10-1-4. Alignment Tapes

The following alignment tapes are available.
The tape specified in the signal column for the adjustment to be performed should be used.

Note that if no tape code is specificed for the adjustments in which alignment tapes for operation check are used, any tape for operation check may be used.

Alignment Tape	Tape Speed	Contents of Record		Applications
		Video Area	PCM Area	
Tracking WR5-1CP (8-967-995-07)	SP	CH2 : 1MHz tape pass adjustment signal Switching position adjustment marker (CH1 : 9MHz)		Tape pass adjustment Switching position adjustment
Video frequency characteristic WR5-6C (8-967-995-17)	SP	RF sweep 0 to 10MHz Marker 1, 3.58, 5.5 and 7MHz		Frequency characteristic
Operation check WR5-4CSP (8-967-995-47) or WR5-5CSP (8-967-995-46)	SP	● Video signal Color bar 4 min. Monoscope 4 min. ● Audio signal (AFM) 400Hz 60% modulated	● Audio signal (PCM) Monoscope portion 20Hz 20sec. } This cycle 400Hz 20sec. } is repeated 14kHz 20sec. } 4 times Color bar portion 1kHz 4min.	Operation check
WR5-4CL (8-967-995-56)	LP	● Video signal Color bar 4 min. Monoscope 4 min. ● Audio signal (AFM) 400Hz 60% modulated		
AFM stereo operation check WR5-9CS (8-967-995-28)	SP	● Video signal Color bar 4 min. Monoscope 4 min. ● Audio signal (AFM) Stereo portion (color bar) Lch : 400Hz Rch : 1kHz (L+R 1.5MHz±60kHz DEV) (L−R 1.7MHz±30kHz DEV) Bilingual portion (monoscope) MAIN : 400Hz (1.5MHz±60kHz DEV) SUB : 1kHz (1.7MHz±30kHz DEV)	● Audio signal (PCM) 400Hz 8 min.	AFM stereo operation check

The color bar signal recorded on these alignment tapes are shown in Fig. 10-3.

Note : This waveform is measured at the VIDEO OUT terminal (terminated at 75Ω).

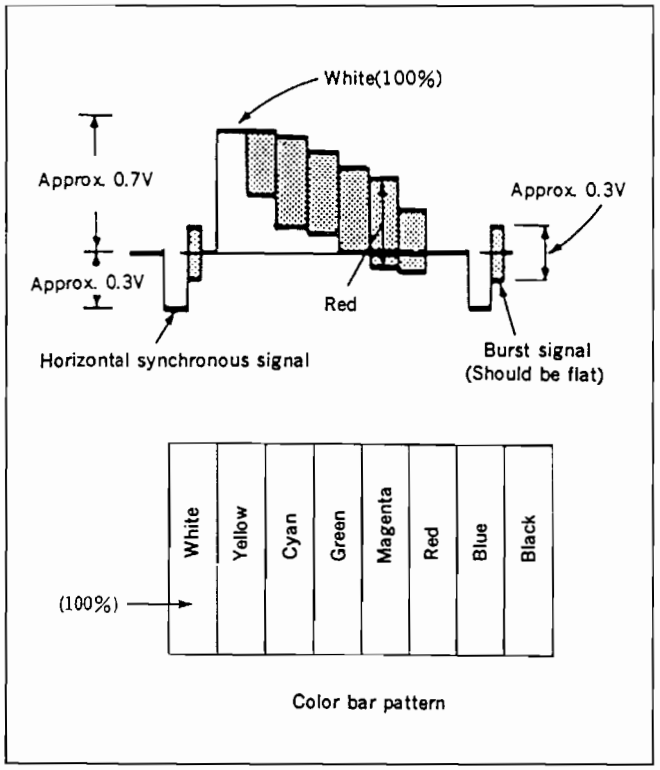

Fig. 10-3. Color Bar Signal of Alignment Tape

10-1-5. Input/Output Levels and Impedance

Video input LINE IN VIDEO (phono jack) (1)
Input signal: 1 Vp-p, 75 ohms, unbalanced, sync negative
Video output LINE OUT VIDEO (phono jack) (1)
Output signal: 1 Vp-p, 75 ohms, unbalanced, sync negative
EURO-AV (21-pin) (1)
Output signal: pin 19 1 Vp-p, 75 ohms unbalanced, sync negative
Audio input LINE IN AUDIO (phono jack) (2)
Input level: −7.5 dBs
Input impedance: more than 47 kilohms
Audio output LINE OUT AUDIO (phono jack) (2)
Standard impedance:
−7.5 dBs at load impedance 47 kilohms
Output impedance:
less than 10 kilohms
EURO-AV (21 pin) (1)
Standard impedance:
−6 dBs at load impedance 1kilohms
Output impedance:less than 10 Kilohms
CONTROL S IN Minijack
CONTROL L stereo mini-mini jack
RF output signal
UK models: UHF channels B30-B39 (variable)
Models for other countries:
UHF channels E30-E39 (variable)
Aerial input/output
75 ohms asymmetrical aerial sockets

10-2. POWER SUPPLY CHECK

10-2-1. Output Voltage Check (POWER SUPPLY BOARD)

Mode	E-E
Measurement instrument	Digital voltmeter
UN 10.5V check	
Measurement point	CN201 pin ⑧
Specified value	10.5±0.1Vdc
UN 5.7V check	
Measurement point	CN201 pin ⑤
Specified value	5.7±0.1Vdc
SW 5V check	
Measurement point	CN201 pin ④
Specified value	5.10±0.05Vdc
UN −5V check	
Measurement point	CN201 pin ①
Specified value	−5.0±0.1Vdc

[Check Method]

1) Each of these supply voltages must meet its specified value.

10-3. SYSTEM CONTROL SYSTEM CHECK

10-3-1. Timer Clock Check (LC-38 Board)

Mode	E-E
Signal	Arbitrary
Measurement point	IC101 pin ④
Measuring instrument	Frequency counter
Specified value	10000±100kHz

Note : A frequency counter should be connected through a buffer amplifier (oscilloscope, etc.) having a high impedance and a low capacitance.

[Check Method]

1) Check to 10000±100kHz.

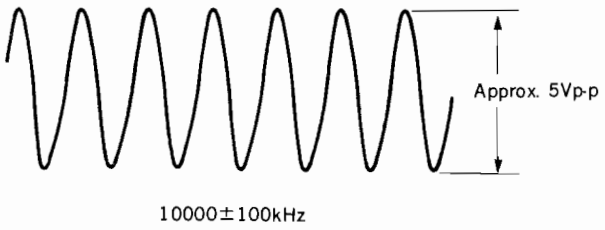

Fig. 10-4.

10-4. SERVO SYSTEM ADJUSTMENTS

[Adjustment sequence]

1. PWM Frequency Adjustment
2. Switching Position Adjustment
3. SLOW Adjustment

10-4-1. PWM Frequency Adjustment (SS-144 Board)

Mode	Record
Signal	Arbitrary
Measurement point	IC005 pin ⑦
Measuring instrument	Frequency counter
Adjustment element	RV102
Specified value	476.5±5.0kHz

[Adjustment Method]

1) Set Recording Time to SP mode.
2) Use RV005 to adjust to 476.5±5.0kHz.
3) Set Recording Time to LP mode.
4) Check for at 476.5±5.0kHz.
5) If the specification is not met, repeat Steps 1) to 4).

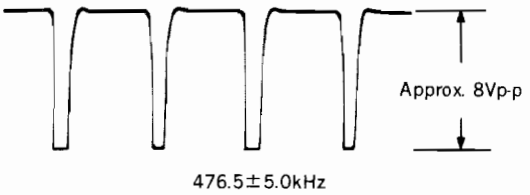

Fig. 10-5.

10-4-2. Switching Position Adjustment (LC-38 Board)

Mode	Playback
Signal	Alignment tape: For operation check (WR5-1CP)
Measurement point	CH-1: RP-159 board CN003 pin ④ (RF SWP) CH-2: RP-159 board CN003 pin ③ (PB RF)
Measuring instrument	Oscilloscope
Adjustment page	0
Adjustment address	03 (Switching Position Data (LOW)) 04 (Switching Position Data (HIGH))
Adjustment element	RV001 RV002
Specified value	t=0±11μsec

[Adjustment Method]

1) Place the adjustment remote control RM-95 (J-6082-053-B) in the HOLD ON position.
2) Use EDIT+/— button to select adjustment page 7.
3) Use FF/REW button to select adjustment address 80.
4) Use PB/STOP button to set to adjustment data 05.
5) Press PAUSE button on the remote control to store the adjustment data.
6) Use EDIT+/— button to select adjustment page 0.
7) Use FF/REW button to select adjustment address 04.
8) Use RV001 to adjust to t=0±255μsec.
9) Use FF/REW button to select adjustment address 03.
10) Use RV002 to adjust to t=0±11μsec.
11) Use EDIT+/—button to select adjustment page 7.
12) Use FF/REW button to select adjustment address 80.
13) Use PB/STOP button to set to adjustment data 00.
14) Press PAUSE button on the remote control to store the adjustment data.

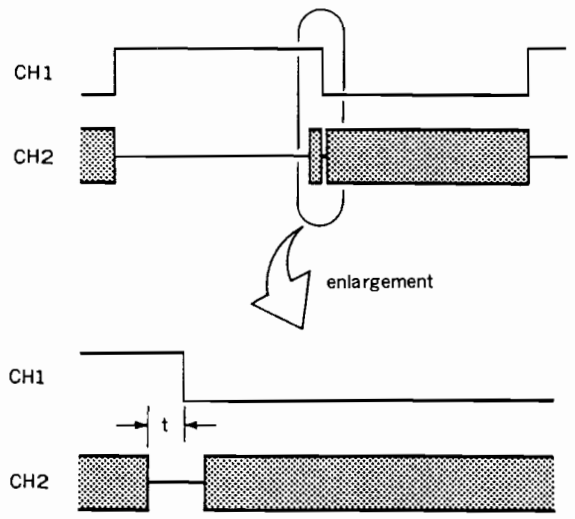

Fig. 10-6.

10-5. VIDEO SYSTEM ADJUSTMENTS

Color video signal supplied from a pattern generator is used as a video input signal for Video System Alignment in the Recording mode. This signal should be checked to ensure that it meets the specifications provided in Fig. 10-2 and "INPUT SIGNAL CHECK".

The adjustments in Video System Alignment should be performed in the following sequence.

[Adjustment sequence]

1. MIDDLE TUNE Adjustment
2. EE Level Adjustment
3. IR Adjustment
4. Y/Chroma Separation Adjustment
5. Emphasis Y Level Adjustment
6. AC Clip Check
7. Y FM Carrier, Y FM Deviation Adjustment
8. Recording Y Level Adjustment
9. Chroma Emphasis Adjustment
10. Recording Chroma Level Adjustment
11. Playback Y Level Adjustment
12. De-emphasis Y Level Check
13. Quasi, DL Burst Adjustment

10-5-1. MIDDLE TUNE Adjustment (RP-159 Board)

(1) 1ch,2ch

Note : The designation 〔 〕 stands for adjustment on CH-2.

Mode	Playback
Signal	Alignment tape: for frequency characteristic adjustment (WR5-6C)
Measurement point	CN003 pin ③ (PB RF) External trigger: CN003 pin ④ (RF SWP) Trigger slope:−〔+〕
Measuring instrument	Oscilloscope
Adjustment element	RV002 〔RV001〕
Specified value	3.58MHz level: 5.5MHz level=4 : 3±0.3

[Adjustment Method]

1) Use RV002 〔RV001〕 to adjust so that the ratio of 3.58MHz level to 5.5MHz of PB RF output waveform is 4 : 3±0.3.

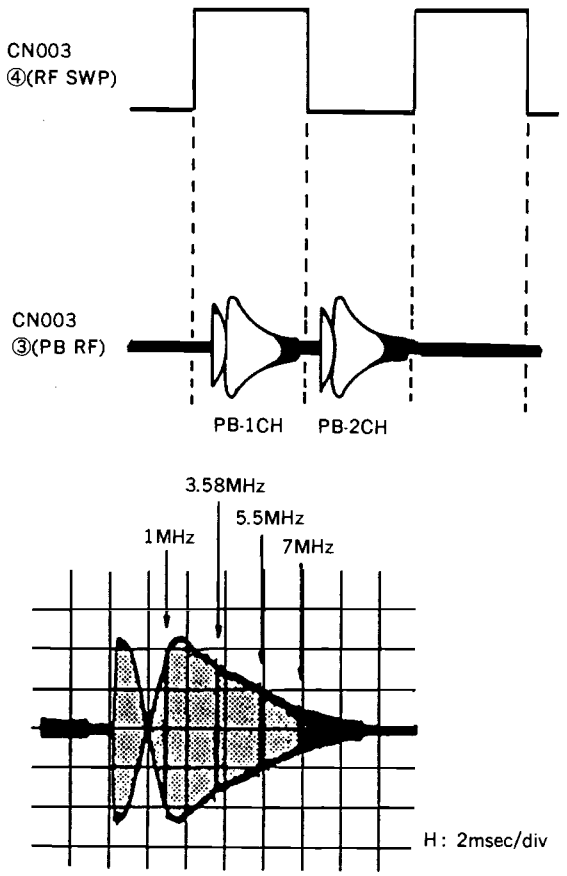

Fig. 10-7.

(2) 1'ch

Mode	Playback
Signal	Alignment tape: for frequency characteristic adjustment (WR5-6C)
Measurement point	CN003 pin ① (1'CH RF) External trigger: CN003 pin ④ (RF SWP)
Measuring instrument	Oscilloscope
Adjustment page	D
Adjustment address	02 (Test Mode (COSMO))
Adjustment element	RV003
Specified value	3.58MHz level: 5.5MHz level=4 : 3±0.3

[Adjustment Method]

1) Place the adjustment remote control in the HOLD ON position.
2) Use EDIT+/— button to select adjustment page D.
3) Use FF/REW button to select adjustment address 02.
4) Use PB/STOP button to select adjustment data 03.
5) Press PAUSE button on the remote control to store the adjustment data.
6) Use RV003 to adjust so that the ratio of 3.58MHz level to 5.5MHz of PB RF output waveform is 4 : 3±0.3.
7) Use EDIT+/— button to select adjustment page D.
8) Use FF/REW button to select adjustment address 02.
9) Use FF/REW button to select adjustment address 00.
10) Press PAUSE button on the remote control to store the adjustment data.
11) Place the adjustment remote control in the HOLD OFF position.

10-5-2. EE Level Adjustment (VI-118 Board)

Mode	Record
Signal	Color bar
Measurement point	CN511 pin ① (LINE OUT V)
Measuring instrument	Oscilloscope
Adjustment element	RV106
Specified value	1.00±0.05Vp-p

[Adjustment Method]

1) Use RV106 to adjust to 1.00±0.05Vp-p.

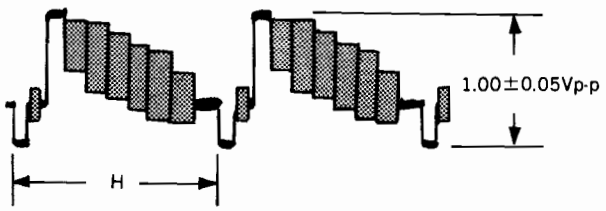

Fig. 10-8.

10-5-3. IR Adjustment (VI-118 Board)

Mode	Record
Signal	Color bar
Measurement point	IC101 pin ⑦ (Y COMB OUT)
Measuring instrument	Oscilloscope
Adjustment element	RV103
Specified value	Red residual chroma component should be minimized (to 60mVp-p or less).

[Connection]

1) Connect between pin ㊿ (SWP) and pin ⑭ (V REF) of IC101.

[Adjustment Method]

1) Use RV103 to adjust so that the red residual chroma component is minimized (to a level of 60mVp-p or less).

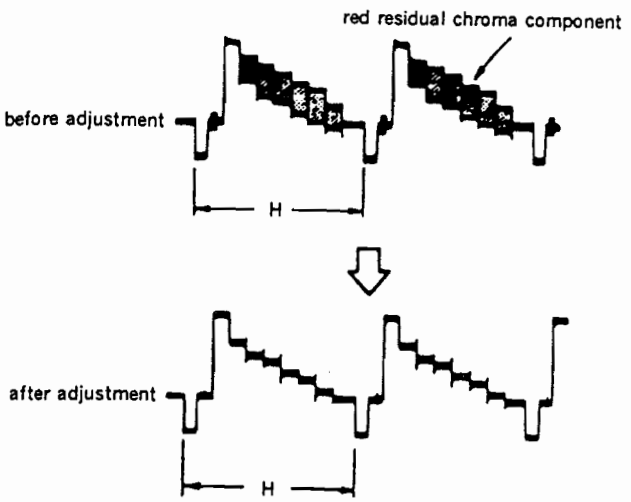

Fig. 10-9.

10-5-4. Y/Chroma Separation Adjustment (VI-118 Board)

Mode	E-E
Signal	Color bar (VIDEO)
Measurement point	IC101 pin ⑪ (C+CD)
Measuring instrument	Oscilloscope
Adjustment element	RV111 (PHASE) RV105 (GAIN)
Specified value	Red residual chroma component should be minimized (to 30mVp-p or less).

[Adjustment Method]

1) Adjust RV111 and RV105 alternately to minimize the red residual chroma component (to a level of 30mVp-p or less).

Note : The adjustment should be performed in the sequence of RV105 to RV111 to RV105 to RV111 two or more times for each trimming.

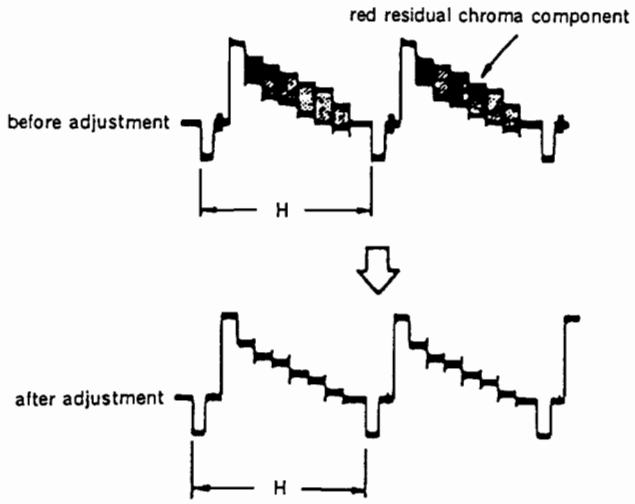

Fig. 10-10.

10-5-5. Emphasis Y Level Adjustment (VI-118 Board)

Mode	Record
Signal	Color bar
Measurement point	IC101 pin ③ (EMPH Y)
Measuring instrument	Oscilloscope
Adjustment element	RV109
Specified value	0.50±0.02Vp-p

[Adjustment Method]

1) Use RV109 and adjust to 0.50±0.02Vp-p.

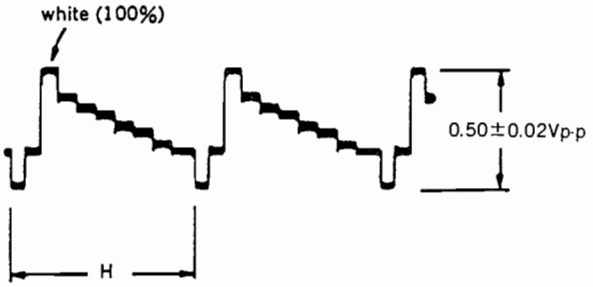

Fig. 10-11.

10-5-6. AC Clip Check (VI-118 Board)

Mode	Record
Signal	Color bar
Measurement point	IC101 pin ㊼ (DEV)
Measuring instrument	Oscilloscope
Specified value	White Clip : $\frac{B}{A}\times 100=235\pm 10\%$ Dark Clip : $\frac{C}{A}\times 100=95\pm 10\%$

Note : To measure with the oscilloscope, effect the band limit of 20MHz.

[Check Method]

1) Check that the output waveform at IC101 pin ㊼ is $\frac{B}{A}\times 100=235\pm 10\%$. Also check that the output waveform at IC101 pin ㊼ is $\frac{C}{A}\times 100=95\pm 10\%$.

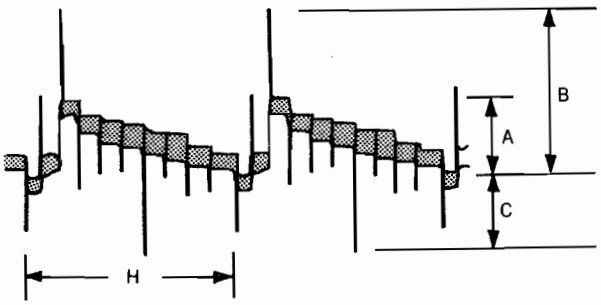

Fig. 10-12.

10-5-7. Y FM Carrier Frequency, Y FM Deviation Adjustment

(1) Y FM Carrier Frequency Adjustment (VI-118 Board)

Mode	Record
Signal	No signal
Measurement point	CN502 pin ⑦ (REC Y RF)
Measuring instrument	Frequency counter Oscilloscope
Adjustment element	RV108
Specified value	4.37±0.02MHz

Note : A frequency counter should be connected through a buffer amplifier (oscilloscope, etc.) having a high impedance and a low capacitance.

[Adjustment Method]

1) Use RV108 to adjust to 4.37±0.02MHz.

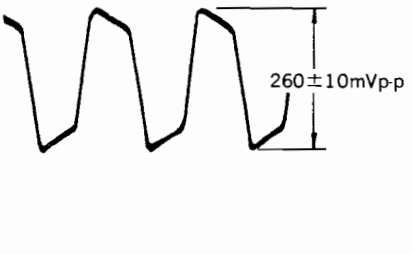

Fig. 10-13.

(2) Y FM Deviation Adjustment (VI-118 Board)

Mode	Record and playback
Signal	Color bar
Measurement point	LINE VIDEO OUT terminal
Measuring instrument	Oscilloscope
Adjustment element	RV107
Specified value	Playback level should be at 1.00±0.05Vp-p.

[Adjustment Method]

1) Record color bar signal.
2) Play back the recorded signal.
3) Check the playback output level.
   Specification: 1.00±0.05Vp-p
4) If the specification is not met, rotate RV107 as directed below and then repeat Steps 1) to 4).

	Direction of Rotating RV107
Over specified value	Counterclockwise (↺)
Below specified value	Clockwise (↻)

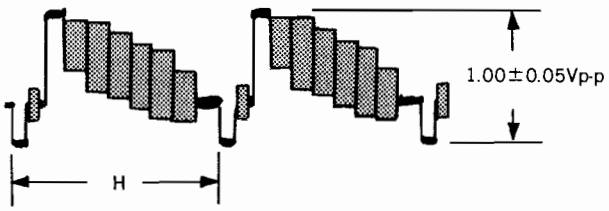

Fig. 10-14.

10-5-8. Recording Y Level Adjustment (VI-118 Board)

Mode	Record
Signal	No signal
Measurement point	CN502 pin ⑦ (REC Y RF)
Measuring instrument	Oscilloscope
Adjustment element	RV102
Specified value	260±10mVp-p

[Adjustment Method]

1) Record.
2) Use RV102 to adjust to 260±10mVp-p.

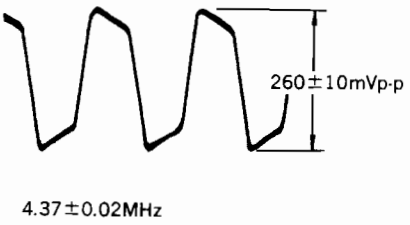

Fig. 10-15.

10-5-9. Chroma Emphasis Adjustment (VI-118 Board)

Mode	Record
Signal	Color bar
Measurement point	IC103 pin ㉔ (B.EMPH 0)
Measuring instrument	Oscilloscope
Adjustment element	FL105
Specified value	fo component should be reduced to a minimum.

[Adjustment Method]

1) Adjust FL105 to allow the latter half of the yellow component in the chroma signal to have a minimum amplitude.

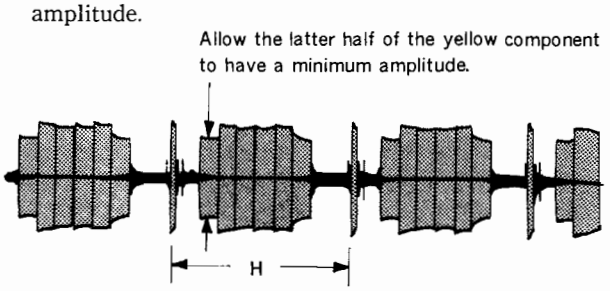

Fig. 10-16.

10-5-10. Recording Chroma Level Adjustment (VI-118 Board)

Mode	Record
Signal	Color bar
Measurement point	CN502 pin ⑧ (REC C RF)
Measuring instrument	Oscilloscope
Adjustment element	RV112
Specified value	140±10mVp-p

[Adjustment Method]

1) Adjust RV112 so that the flat portion of the chroma signal RED component has the level 140±10mVp-p.

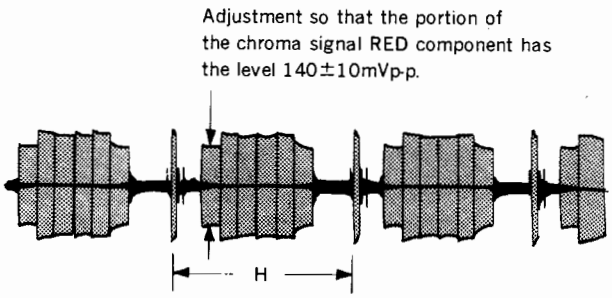

Fig. 10-17.

10-5-11. Playback Y Level Adjustment (VI-118 Board)

Mode	Playback
Signal	Alignment tape: For operation check, color bar portion (WR5-5CSP)
Measurement point	CN511 pin ①
Measuring instrument	Oscilloscope
Adjustment element	RV101
Specified value	1.00±0.05Vp-p

[Adjustment Method]

1) Use RV101 to adjust to 1.00±0.05Vp-p.

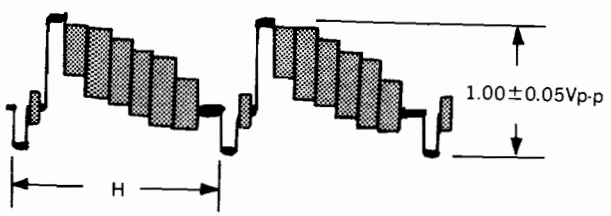

Fig. 10-18.

10-5-12. De-emphasis Y Level Check (VI-118 Board)

Mode	Playback
Signal	Alignment tape: For operation check, color bar portion (WR5-5CSP)
Measurement point	IC101 pin ㉑ (DL IN 1)
Measuring instrument	Oscilloscope
Specified value	0.5±0.1Vp-p

[Check Method]

1) Check to 0.5±0.1Vp-p.

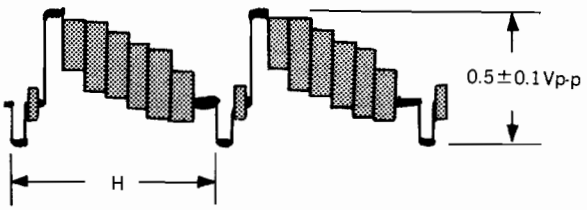

Fig. 10-19.

10-5-13. Quasi, DL Burst Adjustment (VI-118 Board) (Use a Vectorscope)

Mode	Playback + Pause
Signal	Alignment tape for operation check (WR5-5CSP), Color bar portion
Measurement point	VIDEO OUT terminal
Measuring instrument	Vectorscope
Adjustment element	RV401 (QUASI BURST) RV402 (DL BURST)
Specified value	See Fig.10-20.

[Connection]

1) Input 4.43MHz signal from Pin⑫ of IC103 to 1CH of an oscilloscope.
2) Connect 1CH output of an oscilloscope to the EXT. subcarrier reference input of a vectorscope.
3) Put on the EXT. subcarrier switch of a vectorscope.

[Adjustment Method]

1) Adjust with RV401 so as to equalize A and B as shown in Fig. 10-20.
2) Adjust with RV402 so as to minimize the shaking of each three brighting point of C and D.

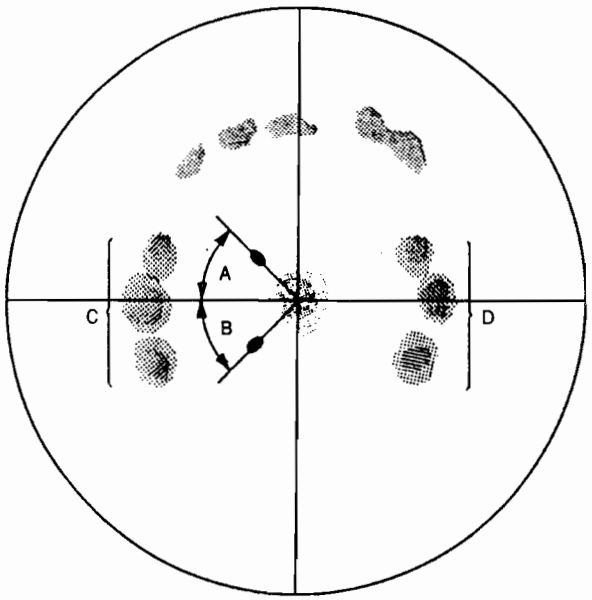

RV401 : A=B
RV402 : make C and a contrast

Fig. 10-20.

10-6. AUDIO SYSTEM ADJUSTMENTS

Color bar signal should be be used as Video signal input for performing this adjustment.

[Connection of Equipment for Audio Measurement]

In addition to equipment for video measurement, the audio measurement equipment should be connected as illustrated below.

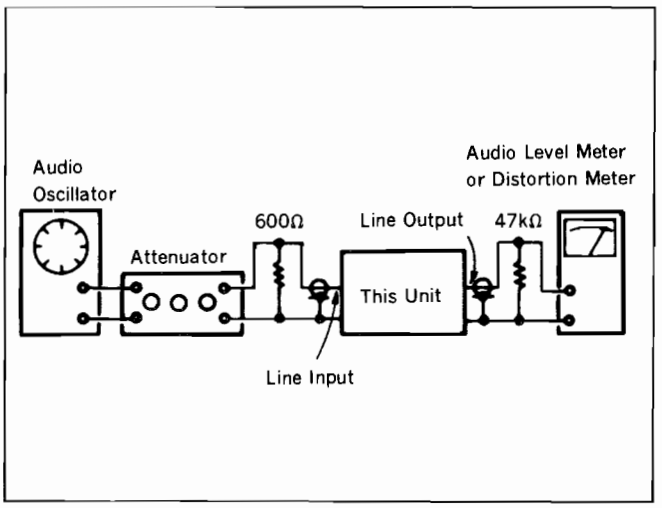

Fig. 10-21.

Unless otherwise specified, place the switches and controls of this unit in the following positions:

● Input Select switch ..... LINE 1

The adjustments should be performed in the following sequence.

[Adjustment sequence]

1. Carrier Frequency 1.5MHz Check
2. Carrier Frequency 1.7MHz Check
3. 1.5MHz Deviation Adjustment
4. 1.7MHz Deviation Adjustment
5. Playback Separation 2 Check
6. Playback Separation 1 Check
7. E-E Output Level Check
8. Overall Frequency Characteristic Check
9. Overall Distortion Factor Check
10. Overall Noise Check

10-6-1. Carrier Frequency 1.5MHz Check (AU-123 Board)

Mode	Record
Signal	No signal
Measurement point	IC901 pin ⑬ (VCO OUT)
Measuring instrument	Frequency counter
Specified value	1500±3kHz

Note 1 : A frequency counter should be connected through a buffer amplifier (oscilloscope, etc.) having a high impedance and a low capacitance.

[Check Method]

1) Check to adjust to 1500±3kHz.

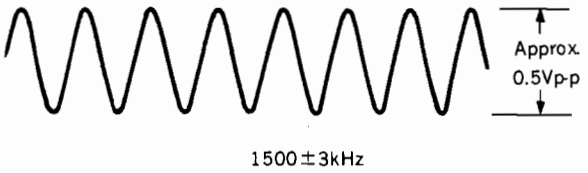

Fig. 10-22.

10-6-2. Carrier Frequency 1.7MHz Check (AU-123 Board)

Mode	Record
Signal	No signal
Measurement point	IC901 pin ⑮ (VCO OUT)
Measuring instrument	Frequency counter
Specified value	1700±3kHz

Note 1 : A frequency counter should be connected through a buffer amplifier (oscilloscope, etc.) having a high impedance and a low capacitance.

[Check Method]

1) Check to adjust to 1700±3kHz.

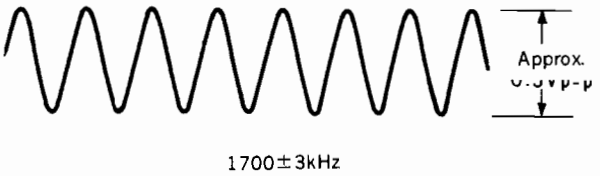

Fig. 10-23.

10-6-3. 1.5MHz Deviation Adjustment (AU-123 Board)

Mode	Playback
Signal	Alignment tape: For operation check, bilingual portion (WR5-9CS)
Measurement point	Audio Line Output terminal, left
Measuring instrument	Audio level meter
Adjustment element	RV901
Specified value	−7.5±0.5dBs

[Adjustment Method]

1) Use the AUDIO LINE IN STEREO/BILINGUAL switch to set the audio output to MAIN/L.
2) Use RV901 to adjust to −7.5±0.5dBs.

10-6-4. 1.7MHz Deviation Adjustment (AU-123 Board)

Mode	Playback
Signal	Alignment tape: For operation check, bilingual portion (WR5-9CS)
Measurement point	Audio Line Output terminal, right
Measuring instrument	Audio level meter
Adjustment element	RV902
Specified value	−7.5±0.5dBs

[Adjustment Method]

1) Use the AUDIO LINE IN STEREO/BILINGUAL switch to set the audio output to SUB/R.
2) Use RV902 to adjust to −7.5±0.5dBs.

10-6-5. Playback Separation 2 Check (AU-123 Board)

Mode	Playback
Signal	Alignment tape: For operation check, stereo portion (WR5-9CS)
Measurement point	Audio Line Output terminal, right
Measuring instrument	Oscilloscope
Specified value	400Hz component minimum (no distortion should be present on 1kHz waveform.)

[Check Method]

1) Check that 400Hz component on the right level is at minimum.

10-6-6. Playback Separation 1 Check (AU-123 Board)

Mode	Playback
Signal	Alignment tape: For operation check, stereo portion (WR5-9CS)
Measurement point	Audio Line Output terminal, left
Measuring instrument	Oscilloscope
Specified value	400Hz component minimum (no distortion should be present on 1kHz waveform.)

[Check Method]

1) Check that 400Hz component on the left level is at minimum.

10-6-7. E-E Output Level Check

Mode	E-E
Signal	400Hz, −7.5dBs
Measurement point	Audio Line Output terminals, left and right
Measuring instrument	Audio level meter
Specified value	−7.5±3dBs

[Check Method]

1) Check that the indicated value of a peak level meter is −7.5dBs.
2) Check that the respective levels of Audio Line Output terminals, left and right are −7.5±3dBs.

10-6-8. Overall Frequency Characteristic Check

Mode	Self-record playback
Signal	Ⓐ 400Hz, −7.5dBs Ⓑ 20Hz, −7.5dBs Ⓒ 14kHz, −7.5dBs : Audio Line Input terminals, left and right
Measurement point	Audio Line Output terminals, left and right
Measuring instrument	Audio level meter
Specified value	The playback output levels of 20Hz and 14kHz should be 0±3dBs with 400Hz playback output level at 0dBs.

[Check Method]

1) Record signals Ⓐ to Ⓒ in turn.
2) Play back the recorded portion.
3) Check that the respective playback output levels of 20Hz and 14kHz are 0±3dBs with 400Hz playback output level at 0dBs.

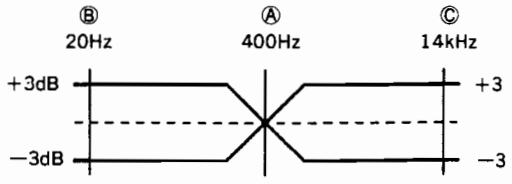

Fig. 10-24.

10-6-9. Overall Distortion Factor Check

Mode	Self-record playback
Signal	400Hz, −7.5dBs : Audio Line Input terminals, left and right
Measurement point	Audio Line Output terminals, left and right
Measuring instrument	Distortion meter
Specified value	Left side: 0.5% or less Note) Right side: 1.0% or less Note)

[Check Method]

1) Record signal.
2) Play back the recorded portion.
3) Check that the distortion factor is 0.5% or less on the left side and 1.0% or less on the right side Note).

Note : These are values when a 200Hz - 6kHz BPF is used.

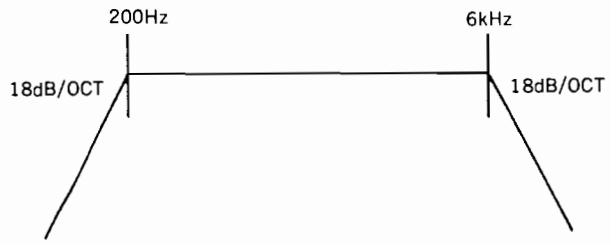

Fig. 10-25.

10-6-10. Overall Noise Level Check

Mode	Self-record playback
Signal	No signal (Insert a shorting plug into the Audio Line Input jacks, left and right.)
Measurement point	Audio Line Output terminals, left and right
Measuring instrument	Audio level meter
Specified value	Left side: −68dBs or less Note) Right side: −63dBs or less Note)

[Check Method]

1) Record.
2) Play back recorded portion.
3) Check that the noise level is −68dBs or less on the left side and −63dBs on the right side.

Note : These are values when an IHF-A weighing filter is used.

10-8. ADJUSTING PARTS LOCATION DIAGRAM

VI-118 BOARD (COMPONENT SIDE)

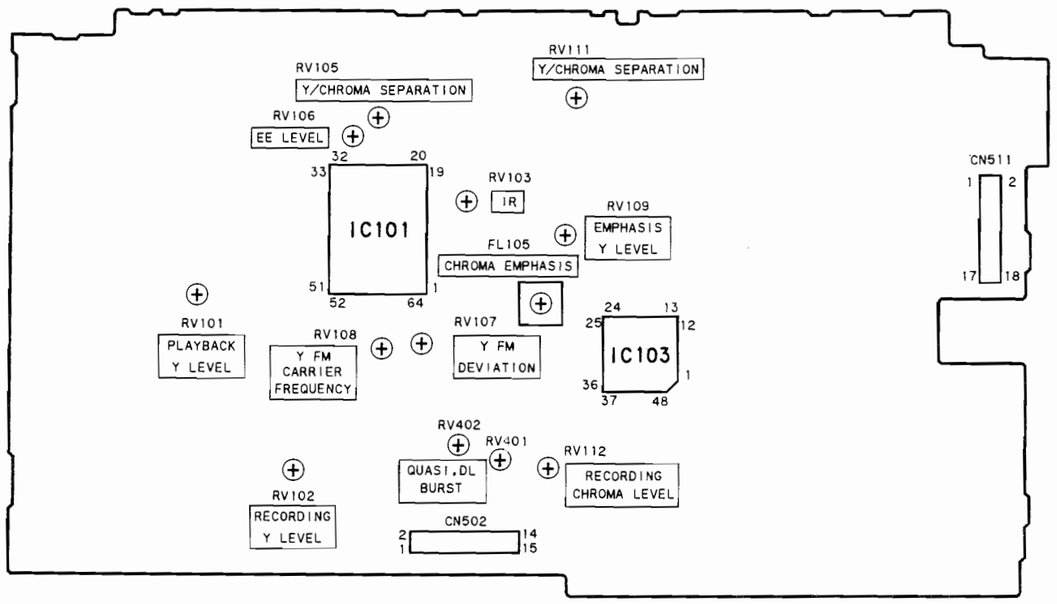

AU-123 BOARD (COMPONENT SIDE)

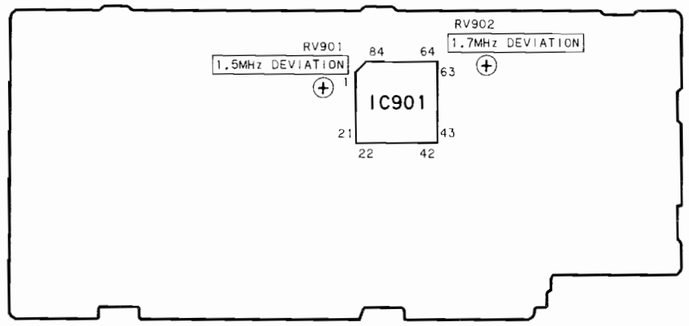

RP-159 BOARD (COMPONENT SIDE)

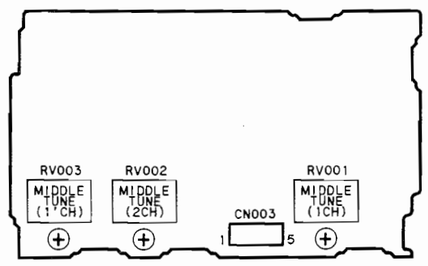

SS-144 BOARD (COMPONENT SIDE)

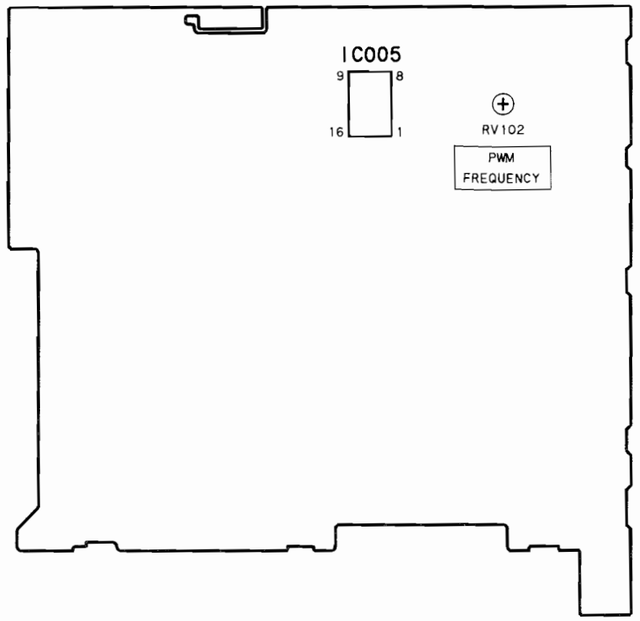

LC-38 BOARD
(COMPONENT SIDE)

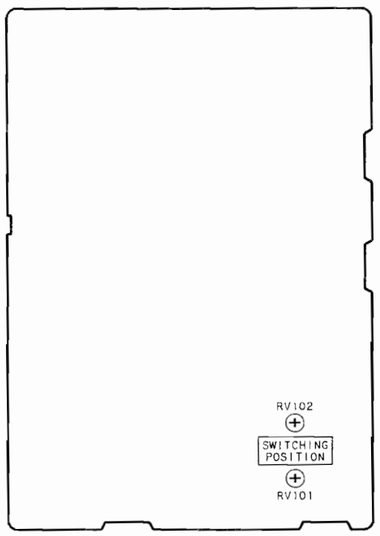

9-973-257-11

Sony Corporation
Home Video Group

English
92H0467-1
Printed in Japan

Published by Customer Relations and Service Group